SITE IMPROVEMENT PLANS
for
BRIDGE POINT O'HARE NORTH

DEERFIELD, IL

PROJECT NO:12271

DEVELOPER
BRIDGE INDUSTRIAL
9525 W. BRYN MAWR, SUITE 700
ROSEMONT, IL 60018
PHONE: (847) 531-3980

CALL J.U.L.I.E. 1-800-892-0123
WITH THE FOLLOWING:
COUNTY LAKE
CITY, TOWNSHIP DEERFIELD
SEC. & ¼ SEC. NO. S31, T43N, R12E
48 HOURS BEFORE YOU DIG.
EXCLUDING SAT., SUN. & HOLIDAYS

BENCHMARK
ELEVATION:
DESCRIPTION: SEE SHEET C3.0 FOR BENCHMARK INFORMATION

NOTE:
SPACECO, INC. IS TO BE NOTIFIED AT LEAST THREE (3) DAYS PRIOR TO STARTING CONSTRUCTION AND SHALL BE INCLUDED IN THE PRECONSTRUCTION MEETINGS

REVISIONS

ORIGINAL PLAN DATE: MARCH 24, 2023

#	SHEET #	REMARKS	DATE

GENERAL NOTES

1. REFERENCED CODES

A. ALL PAVEMENT AND STORM SEWER CONSTRUCTION SHALL CONFORM TO THE STANDARD SPECIFICATIONS FOR ROAD AND BRIDGE CONSTRUCTION (SSRBC), AND SUPPLEMENTAL SPECIFICATIONS AND RECURRING SPECIAL PROVISIONS; ADOPTED APRIL 1, 2016 BY ILLINOIS DEPARTMENT OF TRANSPORTATION AND ALL AMENDMENTS THERETO; AND IN ACCORDANCE WITH THE LATEST EDITION OF THE CODE OF THE MUNICIPALITY; EXCEPT AS MODIFIED HEREIN. IN CASE OF CONFLICT, MUNICIPAL CODE SHALL TAKE PRECEDENCE.

B. ALL SANITARY SEWER AND WATERMAIN CONSTRUCTION SHALL CONFORM TO THE STANDARD SPECIFICATIONS FOR WATER AND SEWER MAIN CONSTRUCTION IN ILLINOIS. PUBLISHED JANUARY 2014, AND IN ACCORDANCE WITH THE CODE OF THE MUNICIPALITY; EXCEPT AS MODIFIED HEREIN OR BY ANY PUBLIC AGENCY PERMITS ISSUED FOR THIS WORK. IN CASE OF CONFLICT, THE MORE RESTRICTIVE PROVISIONS SHALL APPLY.

C. ALL SIDEWALK AND PUBLIC AREAS MUST BE CONSTRUCTED IN ACCORDANCE WITH CURRENT ADA, ILLINOIS HANDICAP ACCESSIBILITY AND ANY APPLICABLE LOCAL ORDINANCES. WHEN CONFLICTS EXIST BETWEEN THE GOVERNING AGENCIES, THE MORE STRINGENT SHALL GOVERN.

D. THE CITED STANDARD SPECIFICATIONS, CODES AND PERMITS, WITH THESE CONSTRUCTION PLANS AND DETAILS, ARE ALL TO BE CONSIDERED PART OF THE CONTRACT. INCIDENTAL ITEMS OR ACCESSORIES NECESSARY TO COMPLETE THIS WORK MAY NOT BE SPECIFICALLY NOTED BUT ARE CONSIDERED A PART OF THIS CONTRACT.

2. UTILITY LOCATIONS

A. THE UTILITY COMPANIES HAVE BEEN CONTACTED IN REFERENCE TO UTILITIES THEY OWN AND OPERATE WITHIN THE LIMITS FOR THIS PROJECT. DATA FROM THESE AGENCIES HAS BEEN INCORPORATED INTO THE PLANS, IT IS, HOWEVER, THE CONTRACTOR'S RESPONSIBILITY TO CONFIRM OR ESTABLISH THE EXISTENCE OF ALL UTILITY FACILITIES AND THEIR EXACT LOCATIONS, AND TO SAFELY SCHEDULE ALL UTILITY RELOCATIONS. FOR ADDITIONAL INFORMATION, THE AGENCIES LISTED ON THIS SHEET MAY BE CONTACTED.

B. THE CONTRACTOR SHALL BE RESPONSIBLE FOR HAVING THE UTILITY COMPANIES LOCATE THEIR FACILITIES IN THE FIELD PRIOR TO CONSTRUCTION AND SHALL ALSO BE RESPONSIBLE FOR THE MAINTENANCE AND PRESERVATION OF THESE FACILITIES. THE ENGINEER DOES NOT WARRANT THE LOCATION OF ANY EXISTING UTILITIES SHOWN ON THE PLAN. THE CONTRACTOR SHALL CALL J.U.L.I.E. AT 800-892-0123 AND THE MUNICIPALITY, FOR UTILITY LOCATIONS. THE CONTRACTOR SHALL NOTIFY ALL UTILITY COMPANIES AND THE MUNICIPALITY TWENTY-FOUR (24) HOURS PRIOR TO STARTING ANY CONSTRUCTION.

C. EASEMENTS FOR THE EXISTING UTILITIES, BOTH PUBLIC AND PRIVATE, AND UTILITIES WITHIN PUBLIC RIGHTS-OF-WAY ARE SHOWN ON THE PLANS ACCORDING TO AVAILABLE RECORDS. THE CONTRACTOR SHALL BE RESPONSIBLE FOR DETERMINING THE EXACT LOCATION IN THE FIELD OF THESE UTILITY LINES AND THEIR PROTECTION FROM DAMAGE DUE TO CONSTRUCTION OPERATIONS. IF EXISTING UTILITY LINES OF ANY NATURE ARE ENCOUNTERED WHICH CONFLICT WITH LOCATIONS OF THE NEW CONSTRUCTION, THE CONTRACTOR SHALL NOTIFY THE OWNER AND ENGINEER SO THAT THE CONFLICT MAY BE RESOLVED.

3. UTILITY COORDINATION

A. OWNER SHALL OBTAIN EASEMENTS AND PERMITS NECESSARY TO FACILITATE CONSTRUCTION OF THE PROPOSED UTILITIES. THE CONTRACTOR, HOWEVER, SHALL FURNISH ALL REQUIRED BONDS AND EVIDENCE OF INSURANCE NECESSARY TO SECURE THESE PERMITS.

B. THE CONTRACTOR IS RESPONSIBLE FOR VERIFYING THE NATURE AND STATUS OF ALL UTILITY RELOCATION WORK PRIOR TO THE START OF CONSTRUCTION. THE CONTRACTOR SHALL TAKE APPROPRIATE MEASURES TO ENSURE THAT CONSTRUCTION OPERATIONS DO NOT INTERFERE WITH UTILITY FACILITIES AND RELOCATION WORK. THE SCHEDULE SHOULD REFLECT CONSTRUCTION SEQUENCING WHICH COORDINATES WITH ALL UTILITY RELOCATION WORK. THE CONTRACTOR SHALL BE REQUIRED TO ADJUST THE ORDER OF ITS WORK FROM TIME TO TIME, TO COORDINATE SAME WITH UTILITY RELOCATION WORK, AND SHALL PREPARE REVISED SCHEDULE(S) IN COMPLIANCE THEREWITH AS DIRECTED BY THE OWNER.

C. THE OWNER AND THE ENGINEER SHALL BE NOTIFIED IN WRITING BY THE CONTRACTOR AT LEAST 48 HOURS PRIOR TO THE START OF ANY OPERATION REQUIRING COOPERATION WITH OTHERS. AT&T SHALL BE CONTACTED ONE MONTH PRIOR TO START OF CONSTRUCTION IN ITS UTILITY AREAS. ALL OTHER AGENCIES, UNLESS OTHERWISE NOTED, SHALL BE NOTIFIED IN WRITING BY THE CONTRACTOR TEN (10) DAYS PRIOR TO THE START OF ANY SUCH OPERATION.

4. ~~NO PLAN SHALL BE USED FOR CONSTRUCTION UNLESS SPECIFICALLY MARKED "FOR CONSTRUCTION".~~ PRIOR TO COMMENCEMENT OF CONSTRUCTION THE CONTRACTOR SHALL VERIFY ALL DIMENSIONS AND CONDITIONS AFFECTING THE WORK WITH THE ACTUAL CONDITIONS AT THE JOB SITE. IN ADDITION, THE CONTRACTOR MUST VERIFY THE ENGINEER'S LINE AND GRADE STAKES. IF THERE ARE ANY DISCREPANCIES WITH WHAT IS SHOWN ON THE CONSTRUCTION PLANS, HE MUST IMMEDIATELY REPORT SAME TO ENGINEER BEFORE DOING ANY WORK, OTHERWISE THE CONTRACTOR ASSUMES FULL RESPONSIBILITY. IN THE EVENT OF DISAGREEMENT BETWEEN THE CONSTRUCTION PLANS, SPECIFICATIONS AND/OR SPECIAL DETAILS, THE CONTRACTOR SHALL SECURE WRITTEN INSTRUCTION FROM THE ENGINEER PRIOR TO PROCEEDING WITH ANY PART OF THE WORK AFFECTED BY OMISSIONS OR DISCREPANCIES. FAILING TO SECURE SUCH INSTRUCTION, THE CONTRACTOR WILL BE CONSIDERED TO HAVE PROCEEDED AT HIS OWN RISK AND EXPENSE. IN THE EVENT OF ANY DOUBT OR QUESTIONS ARISING WITH RESPECT TO THE TRUE MEANING OF THE CONSTRUCTION PLANS OR SPECIFICATIONS, THE DECISION OF THE ENGINEER SHALL BE FINAL AND CONCLUSIVE.

5. ALL PROPOSED ELEVATIONS SHOWN ON THE PLANS ARE FINISHED SURFACE ELEVATIONS, UNLESS OTHERWISE SPECIFIED.

6. UPON AWARDING OF THE CONTRACT, AND WHEN REQUIRED BY THE MUNICIPALITY OR OWNER, THE CONTRACTOR SHALL FURNISH A LABOR, MATERIAL AND PERFORMANCE BOND IN THE AMOUNT REQUIRED GUARANTEEING COMPLETION OF THE WORK. THE UNDERWRITER SHALL BE ACCEPTABLE TO THE MUNICIPALITY OR OWNER, AS APPROPRIATE.

7. THE CONTRACTORS SHALL PLAN THEIR WORK BASED ON THEIR OWN BORINGS, EXPLORATIONS AND OBSERVATIONS TO DETERMINE SOIL CONDITIONS AT THE LOCATION OF THE PROPOSED WORK. HOWEVER, IF THE OWNER HAS A SOILS REPORT, THE RESULTS WILL BE AVAILABLE FROM THE OWNER UPON WRITTEN REQUEST.

8. CONTRACTOR SHALL VIDEO TAPE WORK AREA PRIOR TO CONSTRUCTION FOR THE PURPOSE OF DOCUMENTING EXISTING CONDITIONS.

9. COMMENCING CONSTRUCTION

A. THE CONTRACTOR SHALL NOTIFY THE OWNER AND/OR HIS REPRESENTATIVE AND THE AFFECTED GOVERNMENTAL AGENCIES IN WRITING AT LEAST THREE FULL WORKING DAYS PRIOR TO COMMENCEMENT OF CONSTRUCTION. IN ADDITION, THE CONTRACTOR SHALL NOTIFY AS NECESSARY, ALL TESTING AGENCIES, EITHER MUNICIPALITYS OR THE OWNER'S, SUFFICIENTLY IN ADVANCE OF CONSTRUCTION. ALL MATERIAL TESTING SHALL BE THE RESPONSIBILITY AND EXPENSE OF THE CONTRACTOR. THE TESTING AGENCY SHALL MEET THE APPROVAL OF THE OWNER.

B. FAILURE OF CONTRACTOR TO ALLOW PROPER NOTIFICATION TIME WHICH RESULTS IN TESTING COMPANIES TO BE UNABLE TO VISIT SITE AND PERFORM TESTING WILL CAUSE CONTRACTOR TO SUSPEND OPERATION (PERTAINING TO TESTING) UNTIL TESTING AGENCY CAN SCHEDULE TESTING OPERATIONS. COST OF SUSPENSION OF WORK TO BE BORNE BY CONTRACTOR.

10. ALL CONTRACTORS SHALL KEEP ACCESS AVAILABLE AT ALL TIMES FOR ALL TYPES OF TRAFFIC. AT NO TIME SHALL ACCESS BE DENIED TO ADJACENT PROPERTIES.

11. THE CONTRACTOR SHALL PRESERVE ALL CONSTRUCTION STAKES UNTIL THEY ARE NO LONGER NEEDED. ANY STAKES DESTROYED OR DISTURBED BY THE CONTRACTOR PRIOR TO THEIR USE SHALL BE RESET BY THE DEVELOPER'S ENGINEER AT CONTRACTOR'S COST.

12. ANY EXISTING SIGNS, LIGHT STANDARDS AND UTILITY POLES WHICH INTERFERE WITH CONSTRUCTION OPERATIONS AND NOT NOTED FOR DISPOSAL SHALL BE REMOVED AND RESET BY THE CONTRACTOR AT HIS OWN EXPENSE AS SHOWN ON THE ENGINEERING PLANS OR AS DIRECTED BY THE DEVELOPER. ANY DAMAGE TO THESE ITEMS SHALL BE REPAIRED OR REPLACED BY THE CONTRACTOR AT HIS OWN EXPENSE TO THE SATISFACTION OF THE OWNER. ANY SIGNS NOT REQUIRED TO BE RESET, SHALL BE DELIVERED TO THE RESPECTIVE OWNERS.

13. REMOVAL OF SPECIFIED ITEMS, INCLUDING BUT NOT LIMITED TO, PAVEMENT, SIDEWALK, CURB, CURB AND GUTTER, CULVERTS, ETC. SHALL BE DISPOSED OF OFF-SITE BY THE CONTRACTOR AT HIS OWN EXPENSE. HE IS RESPONSIBLE FOR ANY PERMIT REQUIRED FOR SUCH DISPOSAL.

14. ALL FIELD TILE ENCOUNTERED DURING CONSTRUCTION OPERATIONS SHALL BE CONNECTED TO THE PROPOSED STORM SEWER SYSTEM OR SHALL BE RESTORED TO PROPER OPERATING CONDITION. A RECORD OF THE LOCATION OF ALL FIELD TILE OR DRAIN PIPE ENCOUNTERED SHALL BE KEPT BY THE CONTRACTOR AND TURNED OVER TO THE ENGINEER, DEVELOPER OR MUNICIPAL ENGINEER UPON COMPLETION OF THE PROJECT. THE COST OF THIS WORK SHALL BE CONSIDERED AS INCIDENTAL TO THE CONTRACT AND NO ADDITIONAL COMPENSATION WILL BE ALLOWED.

15. THE CONTRACTOR IS SOLELY RESPONSIBLE FOR SAFETY ON THE JOB.

16. THE CONTRACTOR SHALL COLLECT AND REMOVE ALL CONSTRUCTION DEBRIS, EXCESS MATERIALS, TRASH, OIL AND GREASE RESIDUE, MACHINERY, TOOLS AND OTHER MISCELLANEOUS ITEMS WHICH WERE NOT PRESENT PRIOR TO PROJECT COMMENCEMENT AT NO ADDITIONAL EXPENSE TO THE OWNER. THE CONTRACTOR SHALL BE RESPONSIBLE FOR ACQUIRING ANY AND ALL PERMITS NECESSARY FOR THE HAULING AND DISPOSAL REQUIRED FOR CLEAN-UP AS DIRECTED BY THE ENGINEER OR OWNER. BURNING ON THE SITE IS NOT PERMITTED.

17. ALL EXISTING UTILITIES OR IMPROVEMENTS, INCLUDING WALKS, CURBS, PAVEMENT AND PARKWAYS DAMAGED OR REMOVED DURING CONSTRUCTION SHALL BE PROMPTLY RESTORED TO THEIR RESPECTIVE ORIGINAL CONDITION. THIS WORK SHALL BE CONSIDERED INCIDENTAL TO THE CONTRACT UNLESS SPECIFICALLY NOTED ON THE PLANS.

18. TREES NOT MARKED FOR REMOVAL SHALL BE CONSIDERED AS DESIGNATED TO BE SAVED AND SHALL BE PROTECTED UNDER THE PROVISIONS OF (SSRBC) ARTICLE 201.05.

19. LIMB PRUNING SHALL BE PERFORMED UNDER THE SUPERVISION OF THE LANDSCAPE ARCHITECT MEETING THE OWNER'S APPROVAL AND SHALL BE UNDERTAKEN IN A TIMELY FASHION SO AS NOT TO INTERFERE WITH CONSTRUCTION.

20. ALL LIMBS, BRANCHES, AND OTHER DEBRIS RESULTING FROM THIS WORK SHALL BE DISPOSED OF OFF-SITE BY THE CONTRACTOR AT HIS OWN EXPENSE OFF-SITE.

21. ALL CUTS OVER 1" IN DIAMETER SHALL BE MADE FLUSH WITH THE NEXT LARGE BRANCH. WOUNDS OVER 1" IN DIAMETER SHALL BE PAINTED WITH AN APPROVED TREE PAINT.

22. GENERAL EXCAVATION/UNDERGROUND NOTES

A. SLOPE SIDES OF EXCAVATIONS TO COMPLY WITH CODES AND ORDINANCES HAVING JURISDICTION. SHORE AND BRACE WHERE SLOPING IS NOT POSSIBLE EITHER BECAUSE OF SPACE RESTRICTIONS OR STABILITY OF MATERIAL EXCAVATED. MAINTAIN SIDES AND SLOPES OF EXCAVATIONS IN A SAFE CONDITION UNTIL COMPLETION OF BACKFILLING.

B. PROVIDE MATERIALS FOR SHORING AND BRACING, SUCH AS SHEET PILING, UPRIGHTS, STRINGERS AND CROSS BRACES, IN GOOD SERVICEABLE CONDITION. PROVIDE MINIMUM REQUIREMENTS FOR TRENCH SHORING AND BRACING TO COMPLY WITH CODES AND AUTHORITIES HAVING JURISDICTION. MAINTAIN SHORING AND BRACING IN EXCAVATIONS REGARDLESS OF TIME PERIOD EXCAVATIONS WILL BE OPEN. CARRY DOWN SHORING AND BRACING AS EXCAVATION PROGRESSES IN ACCORDANCE WITH OSHA AND GOVERNING AUTHORITY.

C. PREVENT SURFACE WATER AND SUBSURFACE OR GROUNDWATER FROM FLOWING INTO EXCAVATIONS. REMOVE WATER TO PREVENT SOFTENING OF FOUNDATION BOTTOMS, UNDERCUTTING FOOTINGS, AND SOIL CHANGES DETRIMENTAL TO STABILITY OF SUBGRADES AND FOUNDATIONS. PROVIDE AND MAINTAIN PUMPS, SUMPS, SUCTION AND DISCHARGE LINES AND OTHER DEWATERING SYSTEM COMPONENTS NECESSARY TO CONVEY WATER AWAY FROM EXCAVATIONS. CONVEY WATER REMOVED FROM EXCAVATIONS AND RAINWATER TO COLLECTING OR RUN-OFF AREAS ACCEPTABLE TO AUTHORITIES HAVING JURISDICTION. PROVIDE AND MAINTAIN TEMPORARY DRAINAGE DITCHES AND OTHER DIVERSIONS OUTSIDE EXCAVATION LIMITS FOR EACH STRUCTURE. DO NOT USE TRENCH EXCAVATIONS AS TEMPORARY DRAINAGE DITCHES.

D. IMMEDIATELY REPORT CONDITIONS THAT MAY CAUSE UNSOUND BEARING TO THE OWNER/DEVELOPER BEFORE CONTINUING WORK.

23. FINAL ACCEPTANCE

A. ALL WORK PERFORMED UNDER THIS CONTRACT SHALL BE GUARANTEED BY THE CONTRACTOR AND HIS SURETY FOR A PERIOD OF TWELVE (12) MONTHS FROM THE DATE OF FINAL ACCEPTANCE OF THE PROJECT AND THE CONTRACTOR SHALL BE HELD RESPONSIBLE FOR ALL DEFECTS IN MATERIALS AND WORKMANSHIP OF WHATEVER NATURE DURING THAT PERIOD. THIS GUARANTEE SHALL BE PROVIDED IN THE FORM OF MAINTENANCE BOND IN THE AMOUNT OF 10% OF THE COST OF IMPROVEMENTS.

B. BEFORE ACCEPTANCE BY THE OWNER AND FINAL PAYMENT, ALL WORK SHALL BE INSPECTED BY THE OWNER OR HIS REPRESENTATIVE. FINAL PAYMENT WILL BE MADE AFTER ALL THE CONTRACTOR'S WORK HAS BEEN APPROVED AND ACCEPTED.

C. NO UNDERGROUND WORK SHALL BE COVERED UNTIL IT HAS BEEN APPROVED BY THE MUNICIPALITY. APPROVAL TO PROCEED MUST BE OBTAINED FROM THE MUNICIPALITY PRIOR TO INSTALLING PAVEMENT BASE, BINDER, SURFACE, AND PRIOR TO PLACING ANY CONCRETE AFTER FORMS HAVE BEEN SET.

D. AT THE CLOSE OF EACH WORKING DAY AND AT THE CONCLUSION OF CONSTRUCTION OPERATIONS, ALL DRAINAGE STRUCTURES AND FLOW LINES SHALL BE FREE FROM DIRT AND DEBRIS.

24. UNDERGROUND NOTES

A. UNDERGROUND WORK SHALL INCLUDE TRENCHING, INSTALLATION OF PIPE, CASTINGS, STRUCTURES, BACKFILLING OF TRENCHES AND COMPACTION AND TESTING AS SHOWN ON THE CONSTRUCTION PLANS. FITTINGS AND ACCESSORIES NECESSARY TO COMPLETE THE WORK MAY NOT BE SPECIFIED, BUT SHALL BE CONSIDERED AS INCIDENTAL TO THE COST OF THE CONTRACT.

B. WHERE SHOWN ON THE PLANS OR DIRECTED BY THE ENGINEER, EXISTING DRAINAGE STRUCTURES AND SYSTEMS SHALL BE CLEANED OF DEBRIS AND PATCHED AS NECESSARY TO ASSURE INTEGRITY OF THE STRUCTURE. THIS WORK SHALL BE PAID FOR AT THE CONTRACT UNIT PRICE EACH FOR STRUCTURES AND CONTRACT UNIT PRICE PER LINEAL FOOT FOR SYSTEMS WHICH SHALL BE PAYMENT IN FULL FOR CLEANING, PATCHING, REMOVAL AND DISPOSAL OF DEBRIS AND DIRT. DRAINAGE STRUCTURES AND SYSTEMS CONSTRUCTED AS PART OF THIS PROJECT SHALL BE MAINTAINED BY THE CONTRACTOR AT HIS EXPENSE. NO PAYMENT WILL BE MADE FOR CLEANING STRUCTURES OR SYSTEMS CONSTRUCTED AS PART OF THIS PROJECT.

C. ANY DEWATERING OF SEWER AND WATER TRENCHES AS WELL AS TEMPORARY SHEETING OR BRACING THAT MAY BE REQUIRED SHALL BE THE RESPONSIBILITY OF THE CONTRACTOR AND SHALL NOT BE CONSIDERED EXTRA WORK UNLESS THERE IS A SPECIFIC LINE ITEM FOR DEWATERING. IN THE EVENT THAT UNSTABLE MATERIALS WITH UNCONFINED COMPRESSIVE STRENGTH LESS THAN 0.5 TSF ARE ENCOUNTERED IN SEWER CONSTRUCTION, THE CONTRACTOR SHALL (UPON APPROVAL OF THE OWNER AND/OR ENGINEER) OVER-EXCAVATE TO A DEPTH OF ONE (1) FOOT BELOW THE BOTTOM OF THE PIPE AND BACKFILL WITH COMPACTED CRUSHED STONE, PROPERLY FORMED TO FIT THE BOTTOM OF THE PIPE.

D. TRENCH BACKFILL WILL BE REQUIRED FOR THE FULL TRENCH DEPTH WITHIN TWO (2) FEET OF PROPOSED OR EXISTING PAVEMENT, UTILITIES, DRIVEWAYS, AND SIDEWALKS AND EXTENDING A DISTANCE EQUAL TO A 1:1 SLOPE FROM SUBGRADE ELEVATION TO TOP OF PIPE. THE TRENCH BACKFILL SHALL CONSIST OF GRANULAR MATERIAL MEETING IDOT CA-6 GRADATION. THE TRENCH BACKFILL SHALL BE COMPACTED IN ACCORDANCE WITH (SSRBC) SPECIFICATIONS. JETTING WITH WATER SHALL NOT BE PERMITTED. THE COST OF SUCH CONSTRUCTION SHALL BE CONSIDERED INCIDENTAL TO THIS CONTRACT AND SHALL BE INCLUDED IN THE UNIT PRICE OF THE PIPE. NO SEPARATE PAYMENT SHALL BE MADE FOR THIS ITEM.

E. THE CONTRACTOR SHALL INSTALL A 4" X 4" X 8' (NOMINAL) POST AT THE TERMINUS OF THE SANITARY, WATER AND STORM SERVICE, SANITARY AND STORM MANHOLES, CATCH BASINS, INLETS AND VAULTS. THE POST SHALL EXTEND 4' ABOVE THE GROUND. THE TOP 12" OF SAID POST SHALL BE PAINTED AS FOLLOWS: SANITARY - RED, WATERMAIN - BLUE, STORM - GREEN.

F. AFTER THE STORM SEWER SYSTEM HAS BEEN CONSTRUCTED, THE CONTRACTOR SHALL PLACE EROSION CONTROL AT REAR YARD INLET LOCATIONS, AND AT OTHER LOCATIONS SELECTED BY THE ENGINEER, TO MINIMIZE THE AMOUNT OF SILTATION WHICH NORMALLY WOULD ENTER THE STORM SEWER SYSTEM.

G. HYDRANTS SHALL NOT BE FLUSHED DIRECTLY ON THE ROAD SUBGRADES. WHENEVER POSSIBLE, HOSES SHALL BE USED TO DIRECT THE WATER INTO LOT AREAS OR THE STORM SEWER SYSTEM (IF AVAILABLE). DAMAGE TO THE ROAD SUBGRADE OR LOT GRADING DUE TO EXCESSIVE WATER SATURATION AND/OR EROSION FROM HYDRANT FLUSHING, OR FROM LEAKS IN THE WATER DISTRIBUTION SYSTEM, WILL BE REPAIRED BY THE CONTRACTOR AT HIS COST.

H. ALL TOP OF FRAMES FOR STORM AND SANITARY SEWERS AND VALVE VAULT COVERS ARE TO BE ADJUSTED TO MEET FINAL FINISH GRADE. THIS ADJUSTMENT IS TO BE MADE BY THE SEWER AND WATER CONTRACTOR AND THE COST IS TO BE CONSIDERED INCIDENTAL. THESE ADJUSTMENTS TO FINISHED GRADE WILL NOT ALLEVIATE THE CONTRACTOR FROM ANY ADDITIONAL ADJUSTMENTS AS REQUIRED BY THE MUNICIPALITY UPON FINAL INSPECTION OF THE PROJECT. (FINAL GRADES TO BE DETERMINED BY THE MUNICIPALITY AT THE TIME OF FINAL INSPECTION AND MAY VARY FROM PLAN GRADE.)

I. SLEEVES FOR UTILITY (COMED, TELEPHONE, ETC.) STREET CROSSING, SHALL BE INSTALLED WHERE DIRECTED BY THE OWNER. SLEEVES SHALL BE 0" PVC INSTALLED 36" BELOW THE TOP OF CURB AND EXTEND TWO FEET OUTSIDE THE CURB. TRENCH SHALL BE BACKFILLED WITH COMPACTED GRANULAR MATERIAL.

J. THE CONTRACTOR SHALL VERIFY THE SIZE AND INVERT ELEVATION OF ALL CONNECTIONS TO AVOID ANY CONFLICTS BEFORE STARTING WORK. NOTIFY OWNER OF ANY DISCREPANCIES.

25. IT SHALL BE UNDERSTOOD THAT NEITHER THE MUNICIPALITY, ITS OFFICIALS, CONSULTANTS, NOR ITS EMPLOYEES ARE AGENTS OF OR REPRESENTATIVES OF THE OWNER. NONE-THE-LESS, THE MUNICIPALITY, ITS OFFICIALS AND EMPLOYEES ARE TO BE PROVIDED SAFE ACCESS TO ALL PHASES OF ALL WORK PERFORMED ON THE PROJECT SITE TO MONITOR THE QUALITY OF THE WORK AND ASSURE ITS CONFORMITY WITH THE PLANS AND SPECIFICATIONS. THERE SHALL BE NO PERSONAL LIABILITY UPON ANY OFFICIAL OR EMPLOYEE OF THE MUNICIPALITY ON ACCOUNT OF ACTIONS TAKEN OR NOT TAKEN IN THE COURSE OF THEIR WORK. THE CONTRACTOR MUST AT ALL TIMES MAINTAIN A SAFE ACCESS TO THE WORK FOR INSPECTORS. "SAFE" - MEANING CONDITIONS COMPLYING WITH ALL PROVISIONS OF ALL APPLICABLE AND RECOGNIZED SAFETY STANDARDS, FEDERAL, STATE AND LOCAL. IF ACCESS IS NOT SAFE AND INSPECTIONS CANNOT BE MADE UNDER SAFE CONDITIONS, THE INSPECTOR CAN ORDER CESSATION OF THE WORK SO AFFECTED UNTIL SUCH TIME AS CONTRACTOR PROVIDES SAFE ACCESS.

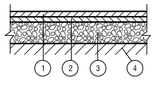

TYPICAL ASPHALT PAVEMENT SECTION
(LIGHT DUTY - PAVEMENT)
N.T.S.

1. 1.5" HMA SURFACE COURSE, MIX "D", IL-9.5, N50
2. 2.5" HMA BINDER COURSE, MIX "D", IL-19.0, N50
3. 8" AGGREGATE BASE COURSE, TYPE B
4. COMPACTED AND STABLE SUBGRADE

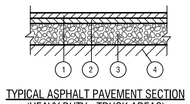

TYPICAL ASPHALT PAVEMENT SECTION
(HEAVY DUTY - TRUCK AREAS)
N.T.S.

1. 2" HMA SURFACE COURSE, MIX "D", IL-9.5, N50
2. 3" HMA BINDER COURSE, MIX "D", IL-19.0, N50
3. 10" AGGREGATE BASE COURSE, TYPE B
4. COMPACTED AND STABLE SUBGRADE

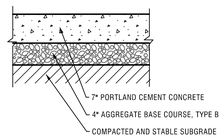

TYPICAL CONCRETE PAVEMENT SECTION
LOADING DOCK & DOLLY PADS
N.T.S.

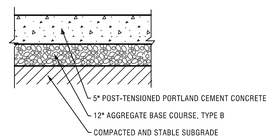

TYPICAL CONCRETE PAVEMENT SECTION
PICKLEBALL COURT PAVEMENT
N.T.S.

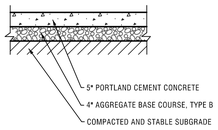

TYPICAL SIDEWALK SECTION
N.T.S.

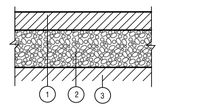

TYPICAL HMA SHARED USE PATH SECTION
N.T.S.

1. 3.0" HMA SURFACE COURSE, MIX "D", IL-9.5, N50 (TWO 1.5" LIFTS)
2. 6" AGGREGATE BASE COURSE, TYPE B
3. COMPACTED AND STABLE SUBGRADE

NOTE:
CURB RAMPS FOR SHARED USE PATH ARE CONCRETE AND THE SECTION SHALL MEET THE TYPICAL SIDEWALK SECTION

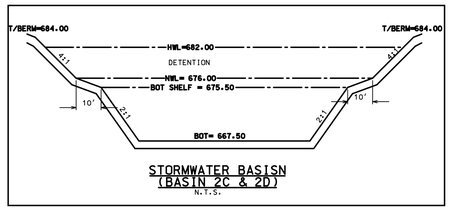

STORMWATER BASISN
(BASIN 2C & 2D)
N.T.S.

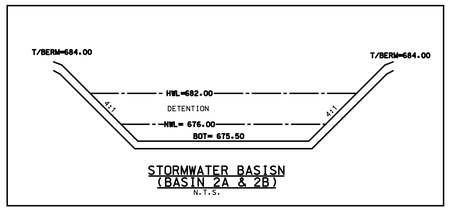

STORMWATER BASISN
(BASIN 2A & 2B)
N.T.S.

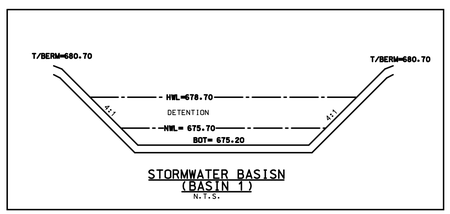

STORMWATER BASISN
(BASIN 1)
N.T.S.

LEGEND

EXISTING	DESCRIPTION	PROPOSED
	DRAIN TILE	
	STORM SEWER	
	SANITARY SEWER	
	SANITARY TRUNK SEWER	
8" W	WATER MAIN (WITH SIZE)	8" W
	PIPE TRENCH BACKFILL	
G	GAS MAIN	G
T	TELEPHONE LINES	T
E	ELECTRIC LINE	E
X	FENCE	X
	RIGHT-OF-WAY	
	EASEMENT	
	PROPERTY LINE	
	SETBACK LINE	
	CENTERLINE	
680	CONTOUR	680
	SANITARY MANHOLE	
	STORM MANHOLE	
	CATCH BASIN	
	INLET	
	FIRE HYDRANT	
	PRESSURE CONNECTION	
	PIPE REDUCER	
	VALVE AND VAULT, VALVE	
	FLARED END SECTION	
	STREET LIGHT	
	UTILITY POLE	
	CONTROL POINT	
	SIGN	
XXX.XX	SPOT ELEVATION	XXX.XX
	SOIL BORING	
	OVERLAND FLOW ROUTE	
	DRAINAGE SLOPE	OR
	GUARDRAIL	
	WATER'S EDGE	
	CONCRETE	
	STANDARD PITCH CURB	
	TREE, FIR TREE, BUSH, & PROPOSED TREE TO REMOVE	

ABBREVIATIONS

M = STORM MANHOLE	I = INVERT OR INLET	T/P = TOP OF PIPE
S = SANITARY MANHOLE	TF = TOP OF FOUNDATION	B/P = BOTTOM OF PIPE
CB = CATCH BASIN	GF = GARAGE FLOOR	WM = WATERMAIN
LP = LIGHT POLE	TC = TOP OF CURB	SAN = SANITARY SEWER
VV = VALVE VAULT	TD = TOP OF DEPRESSED CURB	STM = STORM SEWER
E = END SECTION	TW = TOP OF RETAINING WALL	LO = LOOK OUT
FH = FIRE HYDRANT	BW = BOTTOM OF RETAINING WALL	PLO = PARTIAL LOOK OUT
GR = GRADE RING (HYDRANT)	OP = OUTLET OF PIPE	

PERMITS

DESCRIPTION	LOG NO.	PERMIT NO.	DATE ISSUED

BENCHMARK

SEE SHEET C3.0

CONTACT INFORMATION

LAKE COUNTY
PUBLIC WORKS
650 W WINCHESTER ROAD
LIBERTYVILLE, IL. 60048
(847)-377-7500
CONTACT PERSON: MARC BOURGAULT, P.E.

LAKE COUNTY DIVISION
OF TRANSPORTATION
600 W WINCHESTER ROAD
LIBERTYVILLE, IL. 60048
(847) 377-7498
CONTACT PERSON:

VILLAGE OF DEERFIELD
850 WAUKEGAN ROAD
DEERFIELD, IL. 60015
(847)-317-2490
CONTACT PERSON:

COMMONWEALTH EDISON
1N423 SWIFT ROAD
LOMBARD, IL. 60148
(630) 691-4857
CONTACT PERSON: BILL HEITZ

NORTHSHORE GAS
3001 GRAND AVE
WAUKEGAN, IL 60085
(866) 556-6004
CONTACT PERSON:

NO.	DATE	REMARKS

NO.	DATE	REMARKS

TYPICAL SECTIONS AND GENERAL NOTES

BRIDGE POINT O'HARE NORTH
DEERFIELD, IL

CONSULTING ENGINEERS
SITE DEVELOPMENT ENGINEERS
LAND SURVEYORS
9575 W. Higgins Road, Suite 700
Rosemont, Illinois 60018
Phone: (847) 696-4060 Fax: (847) 696-4065
SPACECO INC.

FILENAME: 12271GN
DATE: 03/24/23
JOB NO. 12271
SHEET C2.0
2 OF 63

N:\Projects 2022\12271\ENG\12271GN.dgn Default User=shermanas

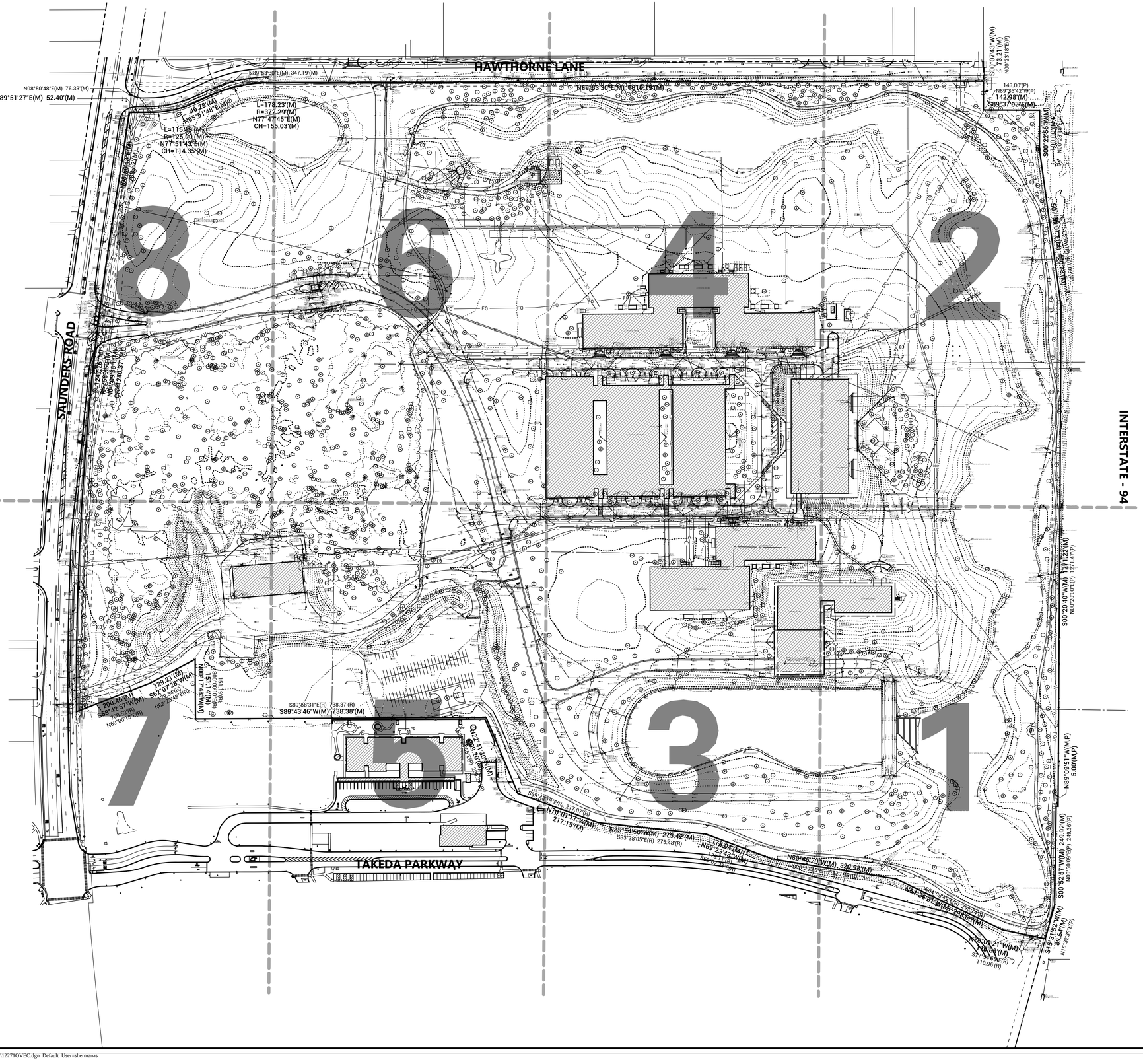

NOTE:

UNDERGROUND UTILITIES ARE SHOWN BY USING PHYSICAL EVIDENCE FOUND ON THE SURFACE AND/OR FROM UTILITY COMPANY FIELD STAKES AND, THEREFORE, THEIR LOCATIONS ARE APPROXIMATE AND SUSPECTED AND MAY NOT BE COMPLETELY ACCURATE. FOR MORE ACCURATE LOCATION, FIELD EXCAVATE.

PIPE FLOW DIRECTIONS, IF SHOWN, ARE BASED ON FIELD INVERT ELEVATIONS UNLESS EXISTING PLANS INDICATE OTHERWISE, IN WHICH CASE THE EXISTING PLAN FLOW DIRECTION IS SHOWN.

LAST DATE OF FIELD WORK: JANUARY 4, 2022.

SOURCE BENCHMARK:
VILLAGE OF DEERFIELD BENCHMARK
MONUMNET: 2007-046
SURVEY MONUMENT NORTHEAST CORNER OF HAWTHORNE LANE AND ONE PARKWAY NORTH AT 1900 HAWTHORN LANE.
ELEVATION = 680.32 NAVD88

SITE BENCHMARK #1:
SOUTHEAST FLANGE BOLT ON FIRE HYDRANT LOCATED ON THE EAST SIDE OF SAUNDERS ROAD +/-344 FEET SOUTH OF THE MAIN ENTRANCE INTO THE SURVEY PROPERTY,
ELEVATION = 686.44 NAVD88

SITE BENCHMARK #2:
SOUTHEAST FLANGE BOLT ON FIRE HYDRANT LOCATED ON THE EAST SIDE OF SAUNDERS ROAD NEAR THE SOUTHWEST PROPERTY CORNER.
ELEVATION = 679.99 NAVD88

SITE BENCHMARK #3:
NORTHEAST FLANGE BOLT ON FIRE HYDRANT LOCATED NORTH OF AN ACCESS DRIVE TO THE EXISTING MAINTENANCE BUILDING, +/-411 FEET EASTERLY OF THE SOUTHEAST CORNER OF SAID MAINTENANCE BUILDING.
ELEVATION = 686.58 NAVD88

SITE BENCHMARK #4:
SOUTHWEST FLANGE BOLT ON FIRE HYDRANT LOCATED SOUTHEAST OF THE EXISTING NORTHWEST POND, +/-200 FEET SOUTH OF THE EDGE OF PAVEMENT OF THE EAST/WEST ACCESS ROAD NAMED HAWTHORNE LANE.
ELEVATION.
ELEVATION = 684.16 NAVD88

SITE BENCHMARK #5:
SOUTHWEST FLANGE BOLT ON FIRE HYDRANT LOCATED SOUTH OF ACCESS DRIVE INTO MAIN CAMPUS BUILDING, +/-84 FEET NORTHWESTERLY OF THE NORTHWEST BUILDING CORNER OF EXISTING BUILDING.
ELEVATION = 685.99 NAVD88

SITE BENCHMARK #6:
SOUTHWEST FLANGE BOLT ON FIRE HYDRANT LOCATED SOUTH OF THE EXISTING RING DRIVE, +/-8 FEET SOUTH OF THE EDGE OF PAVEMENT.
ELEVATION = 687.58 NAVD88

SITE BENCHMARK #7:
SOUTHWEST FLANGE BOLT ON FIRE HYDRANT LOCATED +/-38 FEET NORTHWESTERLY OF THE SOUTHEAST PROPERTY CORNER OF THE SURVEYED PROPERTY.
ELEVATION = 684.08 NAVD88

SITE BENCHMARK #8:
SOUTHEAST FLANGE BOLT ON FIRE HYDRANT LOCATED +/-14 FEET WEST OF THE EAST PROPERTY LINE OF THE SURVEYED PROPERTY AND EAST OF THE EXISTING EAST POND, +/-34 FEEET SOUTHEASTERLY OF AN EXISTING CONCRETE HEADWALL.
ELEVATION = 678.90 NAVD88

SITE BENCHMARK #9:
SOUTHEAST FLANGE BOLT ON FIRE HYDRANT LCOATED +/-25 FEET WEST OF THE EAST PROPERTY LINE OF THE SURVEYED PROPERTY AND +/-6 FEET EAST OF THE EAST EDGE OF THE EXISTING PAVEMENT FOR PEDESTRIAN WALKWAY.
ELEVATION = 680.28 NAVD88

SITE BENCHMARK #10:
SOUTHWEST FLANGE BOLT ON FIRE HYDRANT LOCATED +/-53 FEET NORTHEASTERLY OF THE NORTHEAST CORNER OF THE EXISTING 2 STORY METAL BUILDING.
ELEVATION = 688.46 NAVD88

SITE BENCHMARK #11:
NORTHWEST FLANGE BOLT ON FIRE HYDRANT LOCATED +/-203 FEET EAST OF THE NORTHEAST CORNER OF THE EXISTING 2 STORY METAL BUILDING AND +/-9 FEET SOUTH OF AN EXISTING VALVE VAULT STRUCTURE.
ELEVATION = 687.44 NAVD88

NO.	DATE	REMARKS

NO.	DATE	REMARKS

OVERALL EXISTING CONDITIONS PLAN

BRIDGE POINT O'HARE NORTH
DEERFIELD, IL

CONSULTING ENGINEERS
SITE DEVELOPMENT ENGINEERS
LAND SURVEYORS
9575 W. Higgins Road, Suite 700,
Rosemont, Illinois 60018
Phone: (847) 696-4060 Fax: (847) 696-4065
SPACECO INC.

FILENAME: 12271OVEC

DATE: 03/24/23

JOB NO. 12271

SHEET **C3.0**
3 OF 63

MATCH LINE SEE SHEET - C3.3

KEY MAP

SHEET LOCATION

N.T.S.

SAUNDERS ROAD

I-94

TAKEDA PARKWAY

TAKEDA PARKWAY

N80°46'20"W(M) 320.98'(M)

N64°26'21"W(M) 298.68'(M)

S64°09'49"E(P) 298.71'(P)

S77°54'53"E(P) 110.96'(P)

N78°09'21"W(M) 110.88'(M)

CAUTION

EXISTING STORM SEWER FROM ADJACENT SITE. CONTRACTOR TO VERIFY DEPTH AND LOCATION PRIOR TO CONSTRUCTION. NOTIFY ENGINEER OF ANY CONFLICTS.

SITE BENCHMARK #10

TOP: STORM MANHOLE RIM=686.44 (UNABLE TO LOCATE)

S15°31'52"W(M) 89.54'(M)

N15°32'35"E(P)

S00°52'57"W(M) 249.92'(M)

N00°50'09"E(P) 249.36'(P)

N89°09'51"W(M,P) 5.00'(M,P)

INTERSTATE-94

EXISTING WATERMAIN. CONTRACTOR TO VERIFY DEPTH AND LOCATION PRIOR TO CONSTRUCTION. NOTIFY ENGINEER OF ANY CONFLICTS.

CAUTION

S00°20'40"W(M) 1271.22'(M)

N00°20'00"E(P) 1271.47'(P)

EXISTING FIBER OPTIC LINE. CONTRACTOR TO VERIFY DEPTH AND LOCATION PRIOR TO CONSTRUCTION. NOTIFY ENGINEER OF ANY CONFLICTS.

CAUTION

EXISTING WATERMAIN. CONTRACTOR TO VERIFY DEPTH AND LOCATION PRIOR TO CONSTRUCTION. NOTIFY ENGINEER OF ANY CONFLICTS.

CAUTION

SCALE 1" = 40'

0 40 80

MATCH LINE SEE SHEET - C3.2

NO.	DATE	REMARKS

NO.	DATE	REMARKS

NO.	DATE	REMARKS

EXISTING CONDITIONS PLAN - 1

BRIDGE POINT O'HARE NORTH

DEERFIELD, IL

CONSULTING ENGINEERS
SITE DEVELOPMENT ENGINEERS
LAND SURVEYORS

9575 W. Higgins Road, Suite 700,
Rosemont, Illinois 60018
Phone: (847) 696-4060 Fax: (847) 696-4065

SPACECO INC.

FILENAME: 12271EC1

DATE: 03/24/23

JOB NO. 12271

SHEET C3.1

4 OF 63

MATCH LINE SEE SHEET - C3.4

MATCH LINE SEE SHEET - C3.1

INTERSTATE-94

HAWTHORNE LANE

SCALE 1" = 40'
0 40 80

CAUTION

EXISTING TELEPHONE LINES. CONTRACTOR TO VERIFY DEPTH AND LOCATION PRIOR TO CONSTRUCTION. NOTIFY ENGINEER OF ANY CONFLICTS.

EXISTING WATERMAIN. CONTRACTOR TO VERIFY DEPTH AND LOCATION PRIOR TO CONSTRUCTION. NOTIFY ENGINEER OF ANY CONFLICTS.

EXISTING TELEPHONE LINE. CONTRACTOR TO VERIFY DEPTH AND LOCATION PRIOR TO CONSTRUCTION. NOTIFY ENGINEER OF ANY CONFLICTS.

EXISTING FIBER OPTIC LINE. CONTRACTOR TO VERIFY DEPTH AND LOCATION PRIOR TO CONSTRUCTION. NOTIFY ENGINEER OF ANY CONFLICTS.

EXISTING UNDERGROUND ELECTRIC LINE. CONTRACTOR TO VERIFY DEPTH AND LOCATION PRIOR TO CONSTRUCTION. NOTIFY ENGINEER OF ANY CONFLICTS.

EXISTING OVERHEAD ELECTRIC LINE. CONTRACTOR TO VERIFY DEPTH AND LOCATION PRIOR TO CONSTRUCTION. NOTIFY ENGINEER OF ANY CONFLICTS.

10' ILLINOIS BELL TELEPHONE EASEMENT

S00°07'43"W(M)
73.21'(M)
N00°23'18"E(P)

S89°37'03"E(M)
142.98'(M)
N89°36'42"W(P)
143.00'(P)

S00°22'56"W(M)
100.00'(M,P)
N00°23'18"E(P)

S07°54'01"E(M) 400.78'(M)
N07°55'55"W(P) 401.00'(P)

KEY MAP
SHEET LOCATION
N.T.S.
SAUNDERS ROAD
I-94
TAKEDA PARKWAY

NO.	DATE	REMARKS

MATCH LINE SEE SHEET - C3.5

N70°01'17"W(M) 217.15'(M)

S69°57'19"E(R) 217.07'(M)

N83°54'50"W(M) 275.42'(M)

S83°38'05"E(R) 275.49'(R)

N69°23'43"W(M) 178.04'(M)

S69°24'11"E(R) 178.11'(R)

N80°46'20"W(M) 320.98'

S80°59'20"E(R) 320.96'(R)

TAKEDA PARKWAY

KEY MAP

SHEET LOCATION

N.T.S.

I-94

JANDUS ROAD

TAKEDA PARKWAY

MATCH LINE SEE SHEET - C3.1

MATCH LINE SEE SHEET - C3.4

SCALE 1" = 40'

0 40 80

CAUTION

EXISTING UNDERGROUND ELECTRIC CONTRACTOR TO VERIFY DEPTH AND LOCATION PRIOR TO CONSTRUCTION. NOTIFY ENGINEER OF ANY CONFLICTS.

EXISTING WATERMAIN. CONTRACTOR TO VERIFY DEPTH AND LOCATION PRIOR TO CONSTRUCTION. NOTIFY ENGINEER OF ANY CONFLICTS.

EXISTING TELEPHONE LINE. CONTRACTOR TO VERIFY DEPTH AND LOCATION PRIOR TO CONSTRUCTION. NOTIFY ENGINEER OF ANY CONFLICTS.

EXISTING FIBER OPTIC LINE. CONTRACTOR TO VERIFY DEPTH AND LOCATION PRIOR TO CONSTRUCTION. NOTIFY ENGINEER OF ANY CONFLICTS.

EXISTING WATERMAIN. CONTRACTOR TO VERIFY DEPTH AND LOCATION PRIOR TO CONSTRUCTION. NOTIFY ENGINEER OF ANY CONFLICTS.

EXISTING UNDERGROUND ELECTRIC CONTRACTOR TO VERIFY DEPTH AND LOCATION PRIOR TO CONSTRUCTION. NOTIFY ENGINEER OF ANY CONFLICTS.

EXISTING FIBER OPTIC LINE. CONTRACTOR TO VERIFY DEPTH AND LOCATION PRIOR TO CONSTRUCTION. NOTIFY ENGINEER OF ANY CONFLICTS.

NO.	DATE	REMARKS

NO.	DATE	REMARKS

NO.	DATE	REMARKS

EXISTING CONDITIONS PLAN - 3

BRIDGE POINT O'HARE NORTH

DEERFIELD, IL

CONSULTING ENGINEERS
SITE DEVELOPMENT ENGINEERS
LAND SURVEYORS

9575 W. Higgins Road, Suite 700,
Rosemont, Illinois 60018
Phone: (847) 696-4060 Fax: (847) 696-4065

SPACECO INC.

FILENAME: 12271EC3

DATE: 03/24/23

JOB NO. 12271

SHEET C3.3

6 OF 63

N:\Projects 2022\12271\ENG\12271EC3.dgn Default User=shermanas

SCALE 1" = 40'

0 40 80

MATCH LINE SEE SHEET - C3.6

MATCH LINE SEE SHEET - C3.2

MATCH LINE SEE SHEET - C3.3

KEY MAP

SHEET LOCATION

N.T.S.

TAKEDA PARKWAY

SHERIDAN ROAD

CAUTION

EXISTING FIBER OPTIC LINE. CONTRACTOR TO VERIFY DEPTH AND LOCATION PRIOR TO CONSTRUCTION. NOTIFY ENGINEER OF ANY CONFLICTS.

EXISTING UNDERGROUND ELECTRIC. CONTRACTOR TO VERIFY DEPTH AND LOCATION PRIOR TO CONSTRUCTION. NOTIFY ENGINEER OF ANY CONFLICTS.

EXISTING UNDERGROUND ELECTRIC. CONTRACTOR TO VERIFY DEPTH AND LOCATION PRIOR TO CONSTRUCTION. NOTIFY ENGINEER OF ANY CONFLICTS.

EXISTING WATERMAIN. CONTRACTOR TO VERIFY DEPTH AND LOCATION PRIOR TO CONSTRUCTION. NOTIFY ENGINEER OF ANY CONFLICTS.

EXISTING WATERMAIN. CONTRACTOR TO VERIFY DEPTH AND LOCATION PRIOR TO CONSTRUCTION. NOTIFY ENGINEER OF ANY CONFLICTS.

EXISTING WATERMAIN. CONTRACTOR TO VERIFY DEPTH AND LOCATION PRIOR TO CONSTRUCTION. NOTIFY ENGINEER OF ANY CONFLICTS.

EXISTING UNDERGROUND ELECTRIC. CONTRACTOR TO VERIFY DEPTH AND LOCATION PRIOR TO CONSTRUCTION. NOTIFY ENGINEER OF ANY CONFLICTS.

EXISTING UNDERGROUND ELECTRIC. CONTRACTOR TO VERIFY DEPTH AND LOCATION PRIOR TO CONSTRUCTION. NOTIFY ENGINEER OF ANY CONFLICTS.

EXISTING OVERHEAD ELECTRIC. CONTRACTOR TO VERIFY DEPTH AND LOCATION PRIOR TO CONSTRUCTION. NOTIFY ENGINEER OF ANY CONFLICTS.

EXISTING TELEPHONE LINE. CONTRACTOR TO VERIFY DEPTH AND LOCATION PRIOR TO CONSTRUCTION. NOTIFY ENGINEER OF ANY CONFLICTS.

10' ILLINOIS BELL TELEPHONE EASEMENT

HAWTHORNE LANE

TAKEDA PARKWAY

3 STORY METAL BUILDING

GRANITE WALKWAY

CANVAS ENCLOSURE OVER STAIRCASE

SHED

CONC WALL

METAL BAR RAILING

CHAIN LINK FENCE

NO. | DATE | REMARKS

NO. | DATE | REMARKS

NO. | DATE | REMARKS

EXISTING CONDITIONS PLAN - 4

BRIDGE POINT O'HARE NORTH

DEERFIELD, IL

CONSULTING ENGINEERS
SITE DEVELOPMENT ENGINEERS
LAND SURVEYORS

9575 W. Higgins Road, Suite 700,
Rosemont, Illinois 60018
Phone: (847) 698-4060 Fax: (847) 698-4065

SPACECO INC.

FILENAME: 12271EC4

DATE: 03/24/23

JOB NO. 12271

SHEET **C3.4**

7 OF 63

MATCH LINE SEE SHEET - C3.7

MATCH LINE SEE SHEET - C3.6

MATCH LINE SEE SHEET - C3.3

TAKEDA PARKWAY

S89°58'31"E(R) 738.37'(R)

S89°43'46"W(M) 738.38'(M)

N22°47'30"W(M) 209.20'(M)

S22°24'55"E(R) 209.24'(R)

N70°01'17"W 217.15'(M)

S69°43'19"E(R) 217.07'(R)

SCALE 1" = 40'

0 40 80

N

CAUTION

EXISTING UNDERGROUND ELECTRIC. CONTRACTOR TO VERIFY DEPTH AND LOCATION PRIOR TO CONSTRUCTION. NOTIFY ENGINEER OF ANY CONFLICTS.

CAUTION

EXISTING UNDERGROUND TELEHONE. CONTRACTOR TO VERIFY DEPTH AND LOCATION PRIOR TO CONSTRUCTION. NOTIFY ENGINEER OF ANY CONFLICTS.

CAUTION

EXISTING UNDERGROUND ELECTRIC. CONTRACTOR TO VERIFY DEPTH AND LOCATION PRIOR TO CONSTRUCTION. NOTIFY ENGINEER OF ANY CONFLICTS.

CAUTION

EXISTING FIBER OPTIC LINE. CONTRACTOR TO VERIFY DEPTH AND LOCATION PRIOR TO CONSTRUCTION. NOTIFY ENGINEER OF ANY CONFLICTS.

CAUTION

EXISTING WATERMAIN. CONTRACTOR TO VERIFY DEPTH AND LOCATION PRIOR TO CONSTRUCTION. NOTIFY ENGINEER OF ANY CONFLICTS.

KEY MAP

SHEET LOCATION

N.T.S.

SANDERS ROAD

TAKEDA PARKWAY

I-94

NO.	DATE	REMARKS

NO.	DATE	REMARKS

NO.	DATE	REMARKS

EXISTING CONDITIONS PLAN - 5

BRIDGE POINT O'HARE NORTH

DEERFIELD, IL

CONSULTING ENGINEERS
SITE DEVELOPMENT ENGINEERS
LAND SURVEYORS

9575 W. Higgins Road, Suite 700,
Rosemont, Illinois 60018
Phone: (847) 698-4060 Fax: (847) 696-4065

SPACECO INC.

FILENAME: 12271EC5

DATE: 03/24/23

JOB NO. 12271

SHEET C3.5

8 OF 63

MATCH LINE SEE SHEET - C3.8

MATCH LINE SEE SHEET - C3.5

MATCH LINE SEE SHEET - C3.4

L=178.23'(M)
R=372.29'(M)
N77°47'45"E(M)
CH=156.03'(M)

N89°55'30"E(M) 347.19'(M)

N89°55'30"E

SCALE 1" = 40'
0 40 80

KEY MAP
N.T.S.

HAWTHORNE LANE

CAUTION

EXISTING TELEPHONE LINE. CONTRACTOR TO VERIFY DEPTH AND LOCATION PRIOR TO CONSTRUCTION. NOTIFY ENGINEER OF ANY CONFLICTS.

EXISTING WATERMAIN. CONTRACTOR TO VERIFY DEPTH AND LOCATION PRIOR TO CONSTRUCTION. NOTIFY ENGINEER OF ANY CONFLICTS.

EXISTING WATERMAIN. CONTRACTOR TO VERIFY DEPTH AND LOCATION PRIOR TO CONSTRUCTION. NOTIFY ENGINEER OF ANY CONFLICTS.

EXISTING UNDERGROUND ELECTRIC. CONTRACTOR TO VERIFY DEPTH AND LOCATION PRIOR TO CONSTRUCTION. NOTIFY ENGINEER OF ANY CONFLICTS.

EXISTING FIBER OPTIC LINE. CONTRACTOR TO VERIFY DEPTH AND LOCATION PRIOR TO CONSTRUCTION. NOTIFY ENGINEER OF ANY CONFLICTS.

EXISTING UNDERGROUND ELECTRIC. CONTRACTOR TO VERIFY DEPTH AND LOCATION PRIOR TO CONSTRUCTION. NOTIFY ENGINEER OF ANY CONFLICTS.

EXISTING UNDERGROUND ELECTRIC. CONTRACTOR TO VERIFY DEPTH AND LOCATION PRIOR TO CONSTRUCTION. NOTIFY ENGINEER OF ANY CONFLICTS.

EXISTING UNDERGROUND ELECTRIC. CONTRACTOR TO VERIFY DEPTH AND LOCATION PRIOR TO CONSTRUCTION. NOTIFY ENGINEER OF ANY CONFLICTS.

EXISTING OVERHEAD ELECTRIC. CONTRACTOR TO VERIFY DEPTH AND LOCATION PRIOR TO CONSTRUCTION. NOTIFY ENGINEER OF ANY CONFLICTS.

EXISTING TELEPHONE LINE. CONTRACTOR TO VERIFY DEPTH AND LOCATION PRIOR TO CONSTRUCTION. NOTIFY ENGINEER OF ANY CONFLICTS.

EXISTING UNDERGROUND ELECTRIC. CONTRACTOR TO VERIFY DEPTH AND LOCATION PRIOR TO CONSTRUCTION. NOTIFY ENGINEER OF ANY CONFLICTS.

10' ILLINOIS BELL TELEPHONE EASEMENT

WETLANDS AS FLAGGED BY MIDWEST ECOLOGICAL, INC.

SITE BENCHMARK #4

SITE BENCHMARK #5

NO.	DATE	REMARKS

NO.	DATE	REMARKS

EXISTING CONDITIONS PLAN - 6

BRIDGE POINT O'HARE NORTH

DEERFIELD, IL

CONSULTING ENGINEERS
SITE DEVELOPMENT ENGINEERS
LAND SURVEYORS

9575 W. Higgins Road, Suite 700,
Rosemont, Illinois 60018
Phone: (847) 696-4060 Fax: (847) 696-4065

SPACECO INC.

FILENAME: 12271EC6

DATE: 03/24/23

JOB NO. 12271

SHEET C3.6

9 OF 63

N:\Projects 2022\12271\ENG\12271EC6.dgn Default User=shermanas

SCALE 1" = 40'

0 40 80

N

KEY MAP

N.T.S.

SAUNDERS ROAD

I-94

TAKEDA PARKWAY

MATCH LINE SEE SHEET - C3.5

MATCH LINE SEE SHEET - C3.8

S89°43'46"E(M)

200.45'(M)

S68°42'57"W(M)

200.52'(R)
N68°01'18"E(R)

129.21'(M)

S62°07'28"W(M)

120.34'(R)
N62°23'40"E(R)

151.14'(M)

N00°17'48"W(M)

151.19'(R)
S00°00'10"E(R)

CAUTION

EXISTING UNDERGROUND ELECTRIC. CONTRACTOR TO VERIFY DEPTH AND LOCATION PRIOR TO CONSTRUCTION. NOTIFY ENGINEER OF ANY CONFLICTS.

EXISTING TELEPHONE LINE. CONTRACTOR TO VERIFY DEPTH AND LOCATION PRIOR TO CONSTRUCTION. NOTIFY ENGINEER OF ANY CONFLICTS.

EXISTING GAS LINE. CONTRACTOR TO VERIFY DEPTH AND LOCATION PRIOR TO CONSTRUCTION. NOTIFY ENGINEER OF ANY CONFLICTS.

EXISTING WATERMAIN. CONTRACTOR TO VERIFY DEPTH AND LOCATION PRIOR TO CONSTRUCTION. NOTIFY ENGINEER OF ANY CONFLICTS.

EXISTING TELEPHONE LINE. CONTRACTOR TO VERIFY DEPTH AND LOCATION PRIOR TO CONSTRUCTION. NOTIFY ENGINEER OF ANY CONFLICTS.

EXISTING FIBER OPTIC LINE. CONTRACTOR TO VERIFY DEPTH AND LOCATION PRIOR TO CONSTRUCTION. NOTIFY ENGINEER OF ANY CONFLICTS.

WETLANDS AS FLAGGED BY MIDWEST ECOLOGICAL, INC.

NO.	DATE	REMARKS

NO.	DATE	REMARKS

NO.	DATE	REMARKS

EXISTING CONDITIONS PLAN - 7

BRIDGE POINT O'HARE NORTH

DEERFIELD, IL

CONSULTING ENGINEERS
SITE DEVELOPMENT ENGINEERS
LAND SURVEYORS

9575 W. Higgins Road, Suite 700,
Rosemont, Illinois 60018
Phone: (847) 696-4060 Fax: (847) 696-4065

SPACECO INC.

FILENAME: 12271EC7

DATE: 03/24/23

JOB NO. 12271

SHEET C3.7

10 OF 63

N:\Projects 2022\1227\ENG\12271EC7.dgn Default User=shermanas

KEY MAP

N.T.S.

SAUNDERS ROAD

TAKEDA PARKWAY

I-90

N

SCALE 1" = 40'

0 40 80

CAUTION

EXISTING TELEPHONE LINE. CONTRACTOR TO VERIFY DEPTH AND LOCATION PRIOR TO CONSTRUCTION. NOTIFY ENGINEER OF ANY CONFLICTS.

CAUTION

EXISTING UNDERGROUND ELECTRIC. CONTRACTOR TO VERIFY DEPTH AND LOCATION PRIOR TO CONSTRUCTION. NOTIFY ENGINEER OF ANY CONFLICTS.

THORNGATE LANE

SAUNDERS ROAD

L=124.76'(M)
R=7589.50'(M)
N04°09'36"E(M)
CH=1240.37'(M)

N08°50'48"E(M)
288.62'(M)

52.40'(M)

CAUTION

EXISTING TELEPHONE LINE. CONTRACTOR TO VERIFY DEPTH AND LOCATION PRIOR TO CONSTRUCTION. NOTIFY ENGINEER OF ANY CONFLICTS.

L=115.19'(M)
R=125.00'(M)
N77°51'43"E(M)
CH=114.35'(M)

46.28'(M)
N65°51'48"E(M)

L=178.23'(M)
R=372.29'(M)
N77°47'45"E(M)
CH=156.03'(M)

N89°53'30"E(M) 347.19'(M)

HAWTHORNE LANE

CAUTION

EXISTING UNDERGROUND ELECTRIC. CONTRACTOR TO VERIFY DEPTH AND LOCATION PRIOR TO CONSTRUCTION. NOTIFY ENGINEER OF ANY CONFLICTS.

CAUTION

EXISTING OVERHEAD ELECTRIC. CONTRACTOR TO VERIFY DEPTH AND LOCATION PRIOR TO CONSTRUCTION. NOTIFY ENGINEER OF ANY CONFLICTS.

CAUTION

EXISTING TELEPHONE LINE. CONTRACTOR TO VERIFY DEPTH AND LOCATION PRIOR TO CONSTRUCTION. NOTIFY ENGINEER OF ANY CONFLICTS.

MATCH LINE SEE SHEET - C3.7

MATCH LINE SEE SHEET - C3.6

WETLANDS AS FLAGGED BY MIDWEST ECOLOGICAL, INC.

TRAFFIC FLOW DIAGRAM

SITE BENCHMARK

20' LAKE COUNTY EASEMENT

10' ILLINOIS BELL TELEPHONE EASEMENT

20' WATER LINE EASEMENT

NO.	DATE	REMARKS

NO.	DATE	REMARKS

EXISTING CONDITIONS PLAN - 8

BRIDGE POINT O'HARE NORTH

DEERFIELD, IL

CONSULTING ENGINEERS
SITE DEVELOPMENT ENGINEERS
LAND SURVEYORS

9575 W. Higgins Road, Suite 700,
Rosemont, Illinois 60018
Phone: (847) 696-4060 Fax: (847) 696-4065

SPACECO INC.

FILENAME: 12271EC8

DATE: 03/24/23

JOB NO. 12271

SHEET C3.8

11 OF 63

N:\Projects 2022\12271\ENG\12271EC8.dgn Default User=shermanas

MATCH LINE SEE SHEET - C4.3

KEY MAP

SHEET LOCATION

N.T.S.

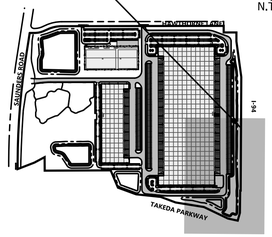

SCALE 1" = 40'

0 40 80

REMOVE WATER FEATURE

EXISTING STORM SEWER TO REMAIN

EXISTING STORM SEWER TO REMAIN

MATCH LINE SEE SHEET - C4.2

I-94

LEGEND

- PAVEMENT SAWCUT (FULL DEPTH)
- CURB AND GUTTER TO BE REMOVED
- UNDERGROUND UTILITY REMOVAL/ABANDONMENT
- BUILDING REMOVAL
- PAVEMENT/SIDEWALK REMOVAL
- STRUCTURE REMOVAL

NOTES:

1. ON-SITE TREES AND PLANTINGS IN CONFLICT WITH PROPOSED IMPROVEMENTS SHALL BE REMOVED. CONTRACTOR TO COORDINATE REMOVALS WITH LANDSCAPE PLANS PRIOR TO CONSTRUCTION.
2. ALL ABANDONED SEWERS SHALL BE PLUGGED AT BOTH ENDS WITH A MINIMUM OF 2' LONG NON-SHRINK CONCRETE/MORTAR PLUGS.
3. 2' LONG NON-SHRINK CONCRETE/MORTAR PLUGS ARE REQUIRED AT MANHOLES WHERE SEWERS ARE REMOVED OR ABANDONED.
4. CONTRACTOR TO COORDINATE EXISTING UTILITY REMOVALS AND DISCONNECTS WITH THE VILLAGE OF DEERFIELD AND THE UTILITY COMPANIES PRIOR TO CONSTRUCTION.

NO.	DATE	REMARKS

NO.	DATE	REMARKS

DEMOLITION PLAN - 1

BRIDGE POINT O'HARE NORTH

DEERFIELD, IL

CONSULTING ENGINEERS
SITE DEVELOPMENT ENGINEERS
LAND SURVEYORS

9575 W. Higgins Road, Suite 700,
Rosemont, Illinois 60018
Phone: (847) 696-4060 Fax: (847) 696-4065

SPACECO INC.

FILENAME: 12271DEMO1

DATE: 03/24/23

JOB NO. 12271

SHEET **C4.1**

12 OF 63

MATCH LINE SEE SHEET - C4.4

MATCH LINE SEE SHEET - C4.1

HAWTHORNE LANE

I-94

EXISTING STORM SEWER TO REMAIN

EXISTING STORM SEWER TO REMAIN

EXISTING STORM SEWER TO REMAIN

SCALE 1" = 40'

0 40 80

NOTES:

1. SEE SHEET C4.1 FOR NOTES AND LEGEND.

KEY MAP

SHEET LOCATION

N.T.S.

MILWAUKEE AVENUE

I-94

TAKEDA PARKWAY

NO.	DATE	REMARKS

NO.	DATE	REMARKS

DEMOLITION PLAN - 2

BRIDGE POINT O'HARE NORTH
DEERFIELD, IL

CONSULTING ENGINEERS
SITE DEVELOPMENT ENGINEERS
LAND SURVEYORS

9575 W. Higgins Road, Suite 700,
Rosemont, Illinois 60018
Phone: (847) 696-4060 Fax: (847) 696-4065

SPACECO INC.

FILENAME: 12271DEMO2

DATE: 03/24/23

JOB NO. 12271

SHEET C4.2

13 OF 63

MATCH LINE SEE SHEET - C4.5

TAKEDA PARKWAY

MATCH LINE SEE SHEET - C4.4

SCALE 1" = 40'

0 40 80

NOTES:

1. SEE SHEET C4.1 FOR NOTES AND LEGEND.

KEY MAP

SHEET LOCATION

N.T.S.

MILWAUKEE AVENUE

I-94

TAKEDA PARKWAY

MATCH LINE SEE SHEET - C4.1

NO.	DATE	REMARKS

NO.	DATE	REMARKS

DEMOLITION PLAN - 3

BRIDGE POINT O'HARE NORTH

DEERFIELD, IL

CONSULTING ENGINEERS
SITE DEVELOPMENT ENGINEERS
LAND SURVEYORS

9575 W. Higgins Road, Suite 700,
Rosemont, Illinois 60018
Phone: (847) 696-4060 Fax: (847) 696-4065

SPACECO INC.

FILENAME: 12271DEMO3

DATE: 03/24/23

JOB NO. 12271

SHEET **C4.3**

14 OF 63

N:\Projects 2022\12271\ENG\12271DEMO3.dgn Default User=shermanas

MATCH LINE SEE SHEET - C4.6

MATCH LINE SEE SHEET - C4.3

MATCH LINE SEE SHEET - C4.2

HAWTHORNE LANE

SCALE 1" = 40'

0 40 80

NOTES:

1. SEE SHEET C4.1 FOR NOTES AND LEGEND.

KEY MAP

SHEET LOCATION

N.T.S.

NO.	DATE	REMARKS

NO.	DATE	REMARKS

DEMOLITION PLAN - 4

BRIDGE POINT O'HARE NORTH

DEERFIELD, IL

CONSULTING ENGINEERS
SITE DEVELOPMENT ENGINEERS
LAND SURVEYORS

9575 W. Higgins Road, Suite 700,
Rosemont, Illinois 60018
Phone: (847) 696-4060 Fax: (847) 696-4065

SPACECO INC.

FILENAME: 12271DEMO4

DATE: 03/24/23

JOB NO. 12271

SHEET C4.4

15 OF 63

N:\Projects 2022\12271\ENG\12271DEMO4.dgn Default User=shermanas

MATCH LINE SEE SHEET - C4.7

TAKEDA PARKWAY

MATCH LINE SEE SHEET - C4.6

SCALE 1" = 40'

0 40 80

NOTES:

1. SEE SHEET C4.1 FOR NOTES AND LEGEND.

KEY MAP

SHEET LOCATION

N.T.S.

MATCH LINE SEE SHEET - C4.3

NO.	DATE	REMARKS

NO.	DATE	REMARKS

DEMOLITION PLAN - 5

BRIDGE POINT O'HARE NORTH

DEERFIELD, IL

CONSULTING ENGINEERS
SITE DEVELOPMENT ENGINEERS
LAND SURVEYORS

9575 W. Higgins Road, Suite 700,
Rosemont, Illinois 60018
Phone: (847) 696-4060 Fax: (847) 696-4065

SPACECO INC.

FILENAME: 12271DEMO5

DATE: 03/24/23

JOB NO. 12271

SHEET C4.5

16 OF 63

NOTES:

1. SEE SHEET C4.1 FOR NOTES AND LEGEND.

NO.	DATE	REMARKS

NO.	DATE	REMARKS

DEMOLITION PLAN - 6

BRIDGE POINT O'HARE NORTH

DEERFIELD, IL

CONSULTING ENGINEERS
SITE DEVELOPMENT ENGINEERS
LAND SURVEYORS

9575 W. Higgins Road, Suite 700,
Rosemont, Illinois 60018
Phone: (847) 698-4060 Fax: (847) 698-4065

SPACECO INC.

FILENAME: 12271DEMO6

DATE: 03/24/23

JOB NO. 12271

SHEET **C4.6**

17 OF 63

N:\Projects 2022\1227\ENG\12271DEMO6.dgn Default User=shermanas

SCALE 1" = 40'

0 40 80

SAUNDERS ROAD

1.5" SURFACE REMOVE AND REPLACE ADJACENT TO CURB AND GUTTER REMOVAL AND REPLACEMENT.

REMOVE AND REPLACE GROOVED THERMOPLASTIC EDGE LINE.

TAKEDA PARKWAY

WETLANDS AS FLAGGED BY MIDWEST ECOLOGICAL, INC.

MATCH LINE SEE SHEET - C4.8

MATCH LINE SEE SHEET - C4.5

NOTES:

1. SEE SHEET C4.1 FOR NOTES AND LEGEND.

KEY MAP

N.T.S.

SAUNDERS ROAD

TAKEDA PARKWAY

NO.	DATE	REMARKS

NO.	DATE	REMARKS

DEMOLITION PLAN - 7

BRIDGE POINT O'HARE NORTH

DEERFIELD, IL

CONSULTING ENGINEERS
SITE DEVELOPMENT ENGINEERS
LAND SURVEYORS

9575 W. Higgins Road, Suite 700,
Rosemont, Illinois 60018
Phone: (847) 698-4060 Fax: (847) 698-4065

SPACECO INC.

FILENAME: 12271DEMO7

DATE: 03/24/23

JOB NO. 12271

SHEET C4.7

18 OF 63

N:\Projects 2022\12271\ENG\12271DEMO7.dgn Default User=shermanas

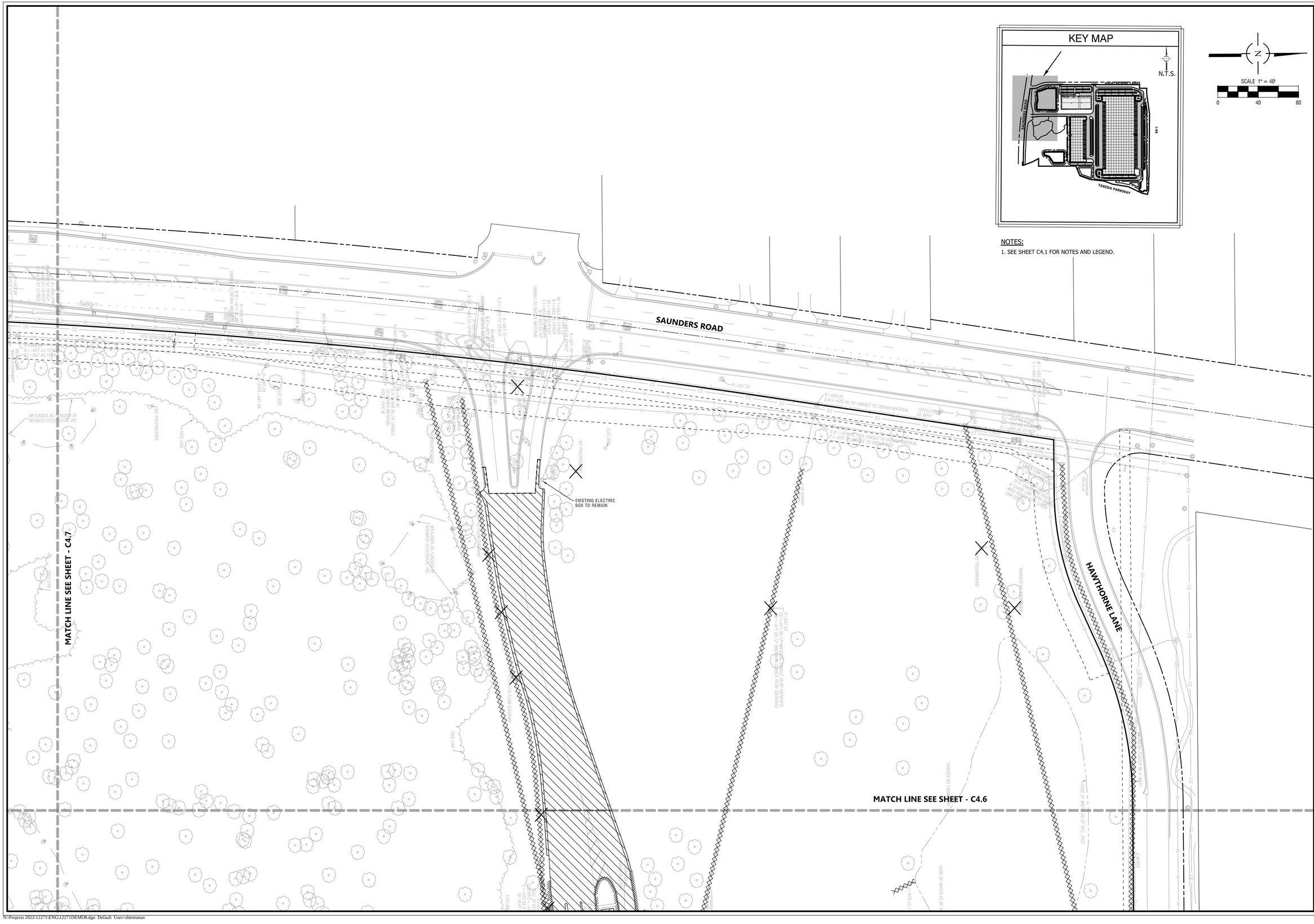

NO.	DATE	REMARKS

NO.	DATE	REMARKS

DEMOLITION PLAN - 8

BRIDGE POINT O'HARE NORTH
DEERFIELD, IL

CONSULTING ENGINEERS
SITE DEVELOPMENT ENGINEERS
LAND SURVEYORS

9575 W. Higgins Road, Suite 700,
Rosemont, Illinois 60018
Phone: (847) 696-4060 Fax: (847) 696-4065

SPACECO INC.

FILENAME: 12271DEMO8

DATE: 03/24/23

JOB NO. 12271

SHEET **C4.8**
19 OF 63

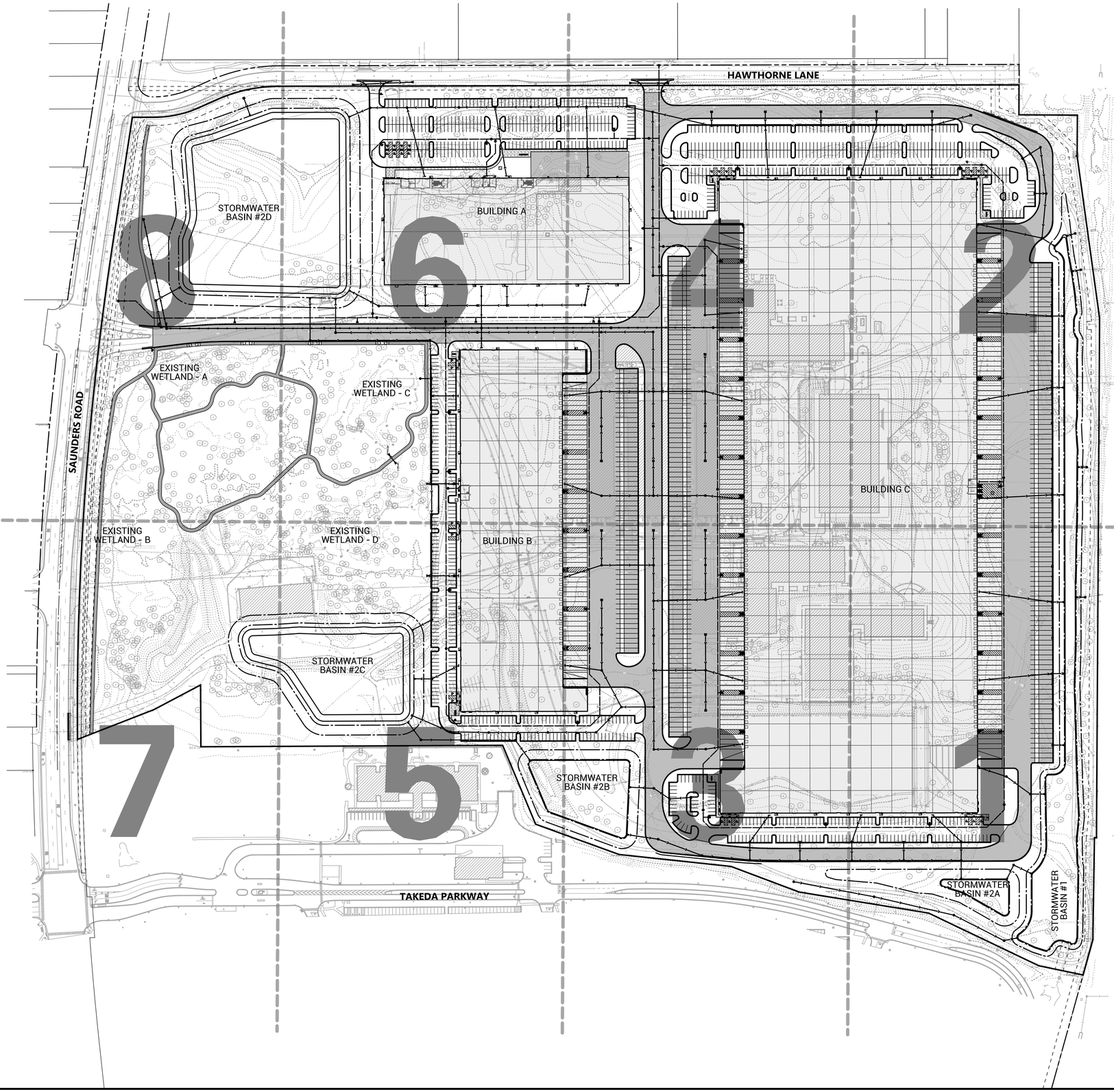

N

SCALE 1" = 120'

0 120 240

NO.	DATE	REMARKS

NO.	DATE	REMARKS

OVERALL SITE PLAN

BRIDGE POINT O'HARE NORTH

DEERFIELD, IL

CONSULTING ENGINEERS
SITE DEVELOPMENT ENGINEERS
LAND SURVEYORS

9575 W. Higgins Road, Suite 700,
Rosemont, Illinois 60018
Phone: (847) 696-4060 Fax: (847) 696-4065

SPACECO INC.

FILENAME: 12271OVSP

DATE: 03/24/23

JOB NO. 12271

SHEET **C5.0**

20 OF 63

N:\Projects 2022\1227\ENG\1227IOVSP.dgn Default User=shermanas

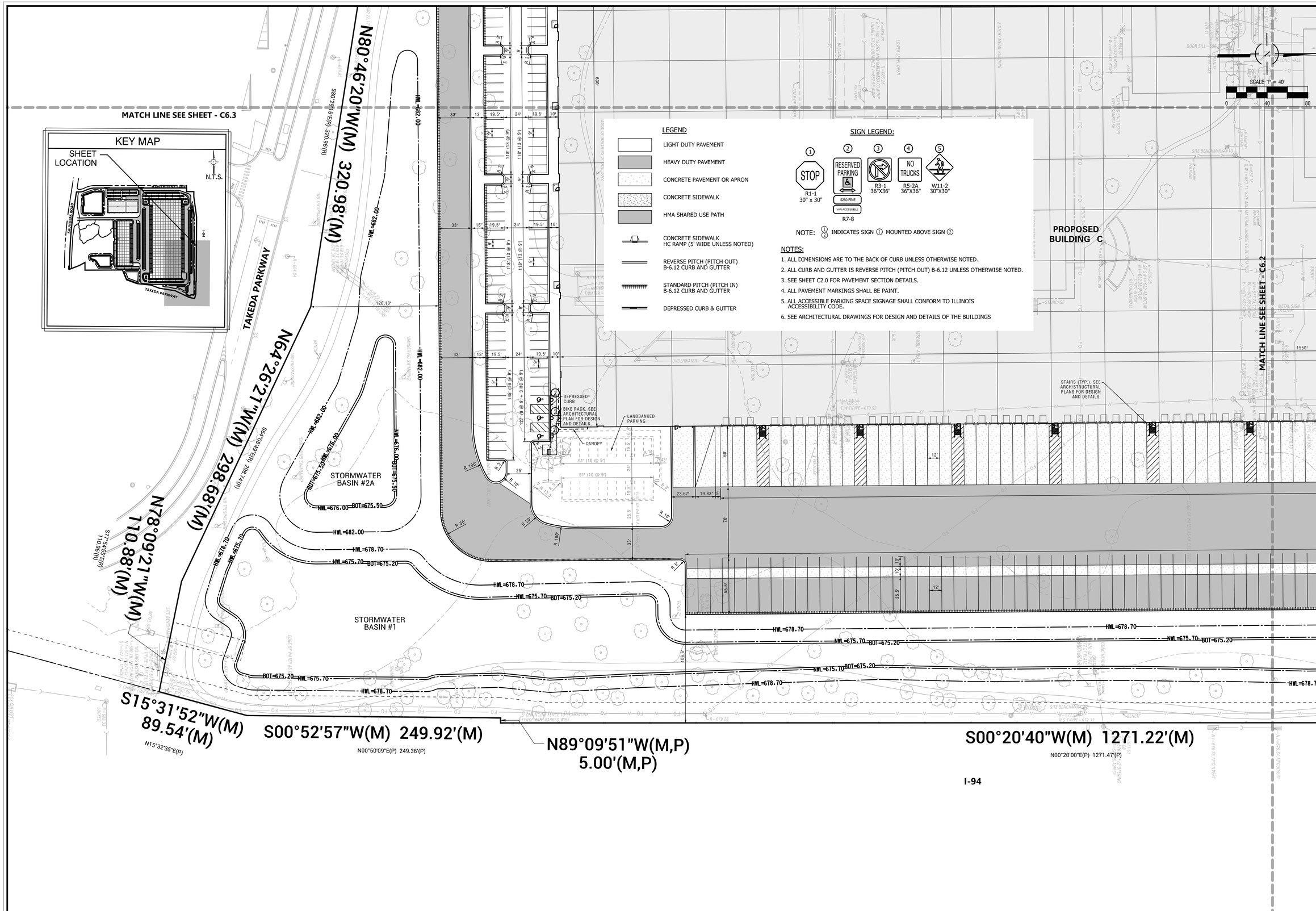

LEGEND

- LIGHT DUTY PAVEMENT
- HEAVY DUTY PAVEMENT
- CONCRETE PAVEMENT OR APRON
- CONCRETE SIDEWALK
- HMA SHARED USE PATH
- CONCRETE SIDEWALK HC RAMP (5' WIDE UNLESS NOTED)
- REVERSE PITCH (PITCH OUT) B-6.12 CURB AND GUTTER
- STANDARD PITCH (PITCH IN) B-6.12 CURB AND GUTTER
- DEPRESSED CURB & GUTTER

SIGN LEGEND:

1	2	3	4	5
STOP	RESERVED PARKING		NO TRUCKS	
R1-1 30" x 30"	$250 FINE / VAN ACCESSIBLE R7-8	R3-1 36"X36"	R5-2A 36"X36"	W11-2 30"X30"

NOTE: ① ② INDICATES SIGN ① MOUNTED ABOVE SIGN ②

NOTES:

1. ALL DIMENSIONS ARE TO THE BACK OF CURB UNLESS OTHERWISE NOTED.
2. ALL CURB AND GUTTER IS REVERSE PITCH (PITCH OUT) B-6.12 UNLESS OTHERWISE NOTED.
3. SEE SHEET C2.0 FOR PAVEMENT SECTION DETAILS.
4. ALL PAVEMENT MARKINGS SHALL BE PAINT.
5. ALL ACCESSIBLE PARKING SPACE SIGNAGE SHALL CONFORM TO ILLINOIS ACCESSIBILITY CODE.
6. SEE ARCHITECTURAL DRAWINGS FOR DESIGN AND DETAILS OF THE BUILDINGS

I-94

NO.	DATE	REMARKS

NO.	DATE	REMARKS

GEOMETRIC PLAN - 1

BRIDGE POINT O'HARE NORTH
DEERFIELD, IL

CONSULTING ENGINEERS
SITE DEVELOPMENT ENGINEERS
LAND SURVEYORS
9575 W. Higgins Road, Suite 700, Rosemont, Illinois 60018
Phone: (847) 696-4060 Fax: (847) 696-4065
SPACECO INC.

FILENAME: 12271GM1

DATE: 03/24/23

JOB NO. 12271

SHEET C6.1

21 OF 63

N:\Projects 2022\12271\ENG\12271GM1.dgn Default User=shermanas

MATCH LINE SEE SHEET - C6.4

MATCH LINE SEE SHEET - C6.1

PROPOSED BUILDING C

HAWTHORNE LANE

SCALE 1" = 40'
0 40 80

APPROXIMATE LOCATION OF TRANSFORMER. CONTRACTOR TO COORDINATE FINAL SIZE AND LOCATION WITH UTILITY COMPANY PRIOR TO CONSTRUCTION AND ADJUST IF NEEDED.

STAIRS (TYP.). SEE ARCH/STRUCTURAL PLANS FOR DESIGN AND DETAILS.

BIKE RACK. SEE ARCHITECTURAL PLANS FOR DESIGN AND DETAILS.

DEPRESSED CURB

RETAINING WALL

20' WATERLINE EASEMENT

STORMWATER BASIN #1

HWL=678.70
NWL=675.70
BOT=675.20

I-94

S07°54'01"E(M) 400.78'(M)
N07°52'55"W(P) 401.08'(P)

S00°22'56"W(M)
100.00'(M,P)
N00°23'18"E(P)

142.98'(M)
S89°37'03"E(M)
N89°36'42"W(P)
143.00'(P)

S00°07'43"W(M)
73.21'(M)
N00°23'18"E(P)

NOTES:
1. SEE SHEET C6.1 FOR NOTES AND LEGEND.

KEY MAP
SHEET LOCATION
N.T.S.
I-94
MEACHAM ROAD
TAXEDA PARKWAY

NO.	DATE	REMARKS

NO.	DATE	REMARKS

GEOMETRIC PLAN - 2

BRIDGE POINT O'HARE NORTH
DEERFIELD, IL

CONSULTING ENGINEERS
SITE DEVELOPMENT ENGINEERS
LAND SURVEYORS
9575 W. Higgins Road, Suite 700,
Rosemont, Illinois 60018
Phone: (847) 696-4060 Fax: (847) 696-4065

SPACECO INC.

FILENAME: 12271GM2

DATE: 03/24/23

JOB NO. 12271

SHEET C6.2
22 OF 63

N:\Projects 2022\1227\ENG\12271GM2.dgn Default User=shermanas

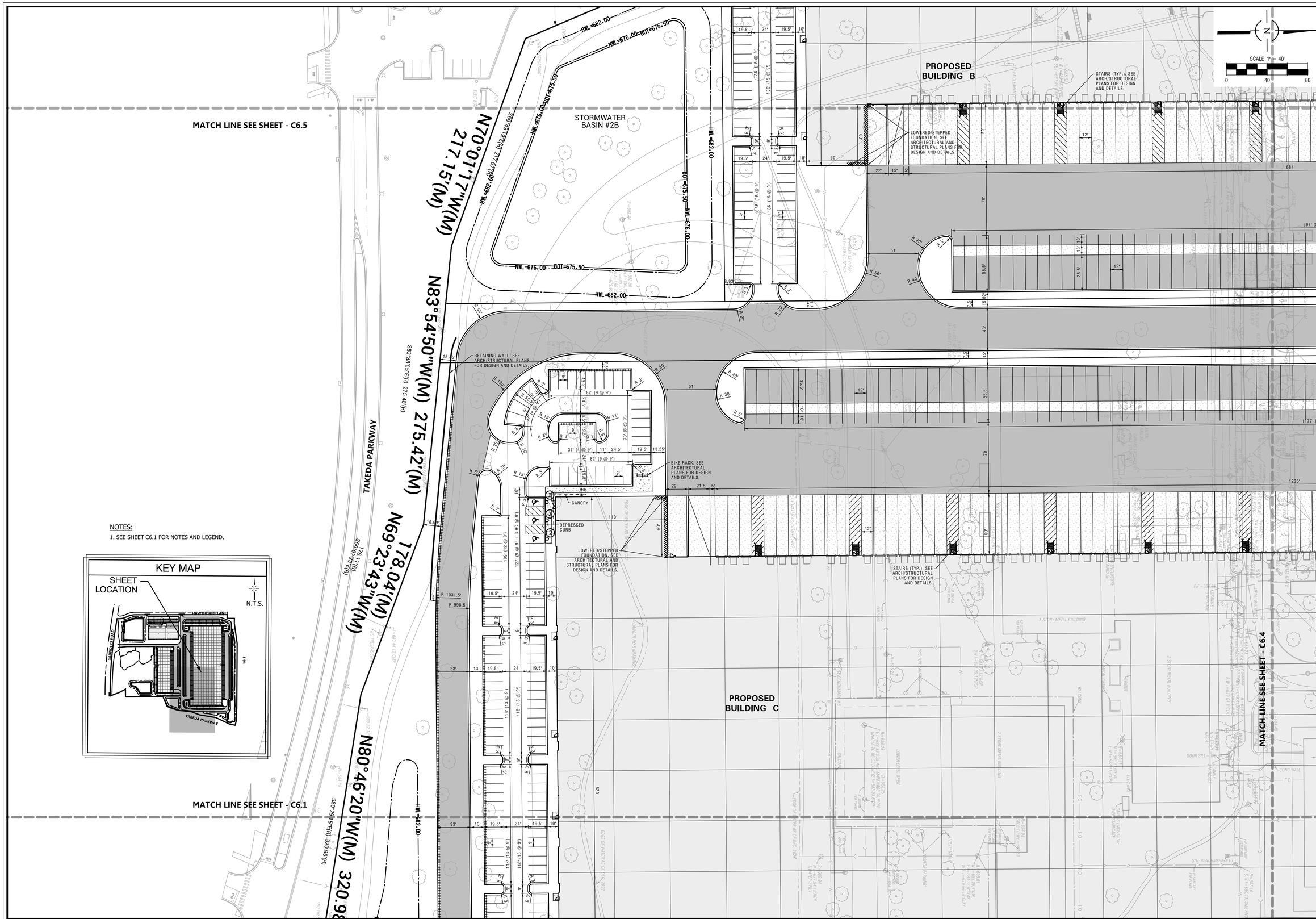

NOTES:

1. SEE SHEET C6.1 FOR NOTES AND LEGEND.

NO.	DATE	REMARKS

NO.	DATE	REMARKS

GEOMETRIC PLAN - 3

BRIDGE POINT O'HARE NORTH
DEERFIELD, IL

CONSULTING ENGINEERS
SITE DEVELOPMENT ENGINEERS
LAND SURVEYORS
9575 W. Higgins Road, Suite 700,
Rosemont, Illinois 60018
Phone: (847) 696-4060 Fax: (847) 696-4065
SPACECO INC.

FILENAME: 12271GM3

DATE: 03/24/23

JOB NO. 12271

SHEET C6.3

N:\Projects 2022\12271\ENG\12271GM3.dgn Default User=shermanas

PROPOSED BUILDING B

STAIRS (TYP.), SEE ARCH/STRUCTURAL PLANS FOR DESIGN AND DETAILS.

LOWERED/STEPPED FOUNDATION, SEE ARCHITECTURAL AND STRUCTURAL PLANS FOR DESIGN AND DETAILS.

MATCH LINE SEE SHEET - C6.6

PROPOSED BUILDING A

N89°53'30"E(M) 1810.19'(M)

MEET EX. PAVEMENT

DEPRESSED CURB

HAWTHORNE LANE

NOTES:

1. SEE SHEET C6.1 FOR NOTES AND LEGEND.

SCALE 1" = 40'

0 40 80

BIKE RACK, SEE ARCHITECTURAL PLANS FOR DESIGN AND DETAILS.

LOWERED/STEPPED FOUNDATION, SEE ARCHITECTURAL AND STRUCTURAL PLANS FOR DESIGN AND DETAILS.

DEPRESSED CURB

CANOPY

18' TRANSITION BETWEEN DEPRESSED AND FULL HEIGHT CURB

10' ILLINOIS BELL TELEPHONE EASEMENT

MATCH LINE SEE SHEET - C6.3

PROPOSED BUILDING C

MATCH LINE SEE SHEET - C6.2

KEY MAP

SHEET LOCATION

N.T.S.

SAXONY DRIVE

I-94

TAKEDA PARKWAY

NO.	DATE	REMARKS

NO.	DATE	REMARKS

GEOMETRIC PLAN - 4

BRIDGE POINT O'HARE NORTH

DEERFIELD, IL

CONSULTING ENGINEERS
SITE DEVELOPMENT ENGINEERS
LAND SURVEYORS

9575 W. Higgins Road, Suite 700,
Rosemont, Illinois 60018
Phone: (847) 696-4060 Fax: (847) 696-4065

SPACECO INC.

FILENAME: 12271GM4

DATE: 03/24/23

JOB NO. 12271

SHEET **C6.4**

24 OF 63

N:\Projects 2022\12271\ENG\12271GM4.dgn Default User=shermanas

MATCH LINE SEE SHEET - C6.7

MATCH LINE SEE SHEET - C6.3

MATCH LINE SEE SHEET - C6.6

TAKEDA PARKWAY

STORMWATER BASIN #2C

STORMWATER BASIN #2B

EXISTING WETLAND - D

PROPOSED BUILDING B

S89°43'46"W(M) 738.38'(M)

S89°58'31"E(R) 738.37'(R)

N22°41'30"W(M) 209.20'(M)

S22°24'55"E(R) 209.24'(R)

N70°01'17"W 217.15'(M)

S69°43'19"E(R) 217.07'(R)

NWL=682.00

NWL=676.00

675.50

BOT=667.50

HWL=682.00

HWL=676.00

BOT=675.50

SCALE 1" = 40'

0 40 80

NOTES:

1. SEE SHEET C6.1 FOR NOTES AND LEGEND.

KEY MAP

SHEET LOCATION

N.T.S.

TAKEDA PARKWAY

SAUNDERS ROAD

DEERFIELD ROAD

I-94

DEPRESSED CURB

BIKE RACK. SEE ARCHITECTURAL PLANS FOR DESIGN AND DETAILS.

18' TRANSITION BETWEEN DEPRESSED AND FULL HEIGHT CURB

CANOPY

DEPRESSED CURB CANOPY

DEPRESSED CURB

STAIRS (TYP.), SEE ARCH/STRUCTURAL PLANS FOR DESIGN AND DETAILS.

LOWERED/STEPPED FOUNDATION. SEE ARCHITECTURAL AND STRUCTURAL PLANS FOR DESIGN AND DETAILS.

136' (15 @ 9')

127' (2 HC @ 9' + 11 @ 9')

138' (13 @ 9' + 1 HC @ 9')

64' (5 @ 9' + 1 HC @ 9')

37' (4 @ 9')

885'

684'

70'

60'

80'

12'

NO.	DATE	REMARKS

NO.	DATE	REMARKS

GEOMETRIC PLAN - 5

BRIDGE POINT O'HARE NORTH
DEERFIELD, IL

CONSULTING ENGINEERS
SITE DEVELOPMENT ENGINEERS
LAND SURVEYORS

9575 W. Higgins Road, Suite 700,
Rosemont, Illinois 60018
Phone: (847) 696-4060 Fax: (847) 696-4065

SPACECO INC.

FILENAME: 12271GM5

DATE: 03/24/23

JOB NO. 12271

SHEET C6.5

25 OF 63

N:\Projects 2022\1227\ENG\12271GM5.dgn Default User=shermanas

MATCH LINE SEE SHEET - C6.5

EXISTING WETLAND - C

HC RAMP
HC RAMP
10' WIDE DEPRESSED CURB
HC RAMP
HC RAMP
10' WIDE DEPRESSED CURB

DEPRESSED CURB

APPROXIMATE LOCATION OF TRANSFORMER. CONTRACTOR TO COORDINATE FINAL SIZE AND LOCATION WITH UTILITY COMPANY PRIOR TO CONSTRUCTION AND ADJUST IF NEEDED.

BIKE RACK. SEE ARCHITECTURAL PLANS FOR DESIGN AND DETAILS.

KEY MAP

N.T.S.

SAUNDERS ROAD

TAKEDA PARKWAY

PROPOSED BUILDING B

STAIRS (TYP.). SEE ARCH/STRUCTURAL PLANS FOR DESIGN AND DETAILS.

LOWERED/STEPPED FOUNDATION. SEE ARCHITECTURAL AND STRUCTURAL PLANS FOR DESIGN AND DETAILS.

STORMWATER BASIN #2D

MATCH LINE SEE SHEET - C6.8

HWL=682.00
NWL=676.00
675.50
BOT=667.50

L=178.23'(M)
R=372.29'(M)
N77°47'45"E(M)
CH=156.03'(M)

N89°53'30"E(M) 347.19'(M)

DEPRESSED CURB CANOPY

PROPOSED BUILDING A

APPROXIMATE LOCATION OF TRANSFORMER. CONTRACTOR TO COORDINATE FINAL SIZE AND LOCATION WITH UTILITY COMPANY PRIOR TO CONSTRUCTION AND ADJUST IF NEEDED.

BIKE RACK. SEE ARCHITECTURAL PLANS FOR DESIGN AND DETAILS.

MATCH LINE SEE SHEET - C6.4

DEPRESSED CURB
MEET EX. PAVEMENT

HAWTHORNE LANE

SCALE 1" = 40'
0 40 80

NOTES:
1. SEE SHEET C6.1 FOR NOTES AND LEGEND.

NO.	DATE	REMARKS

NO.	DATE	REMARKS

GEOMETRIC PLAN - 6

BRIDGE POINT O'HARE NORTH

DEERFIELD, IL

CONSULTING ENGINEERS
SITE DEVELOPMENT ENGINEERS
LAND SURVEYORS

9575 W. Higgins Road, Suite 700,
Rosemont, Illinois 60018
Phone: (847) 696-4060 Fax: (847) 696-4065

SPACECO INC.

FILENAME: 12271GM6

DATE: 03/24/23

JOB NO. 12271

SHEET C6.6
26 OF 63

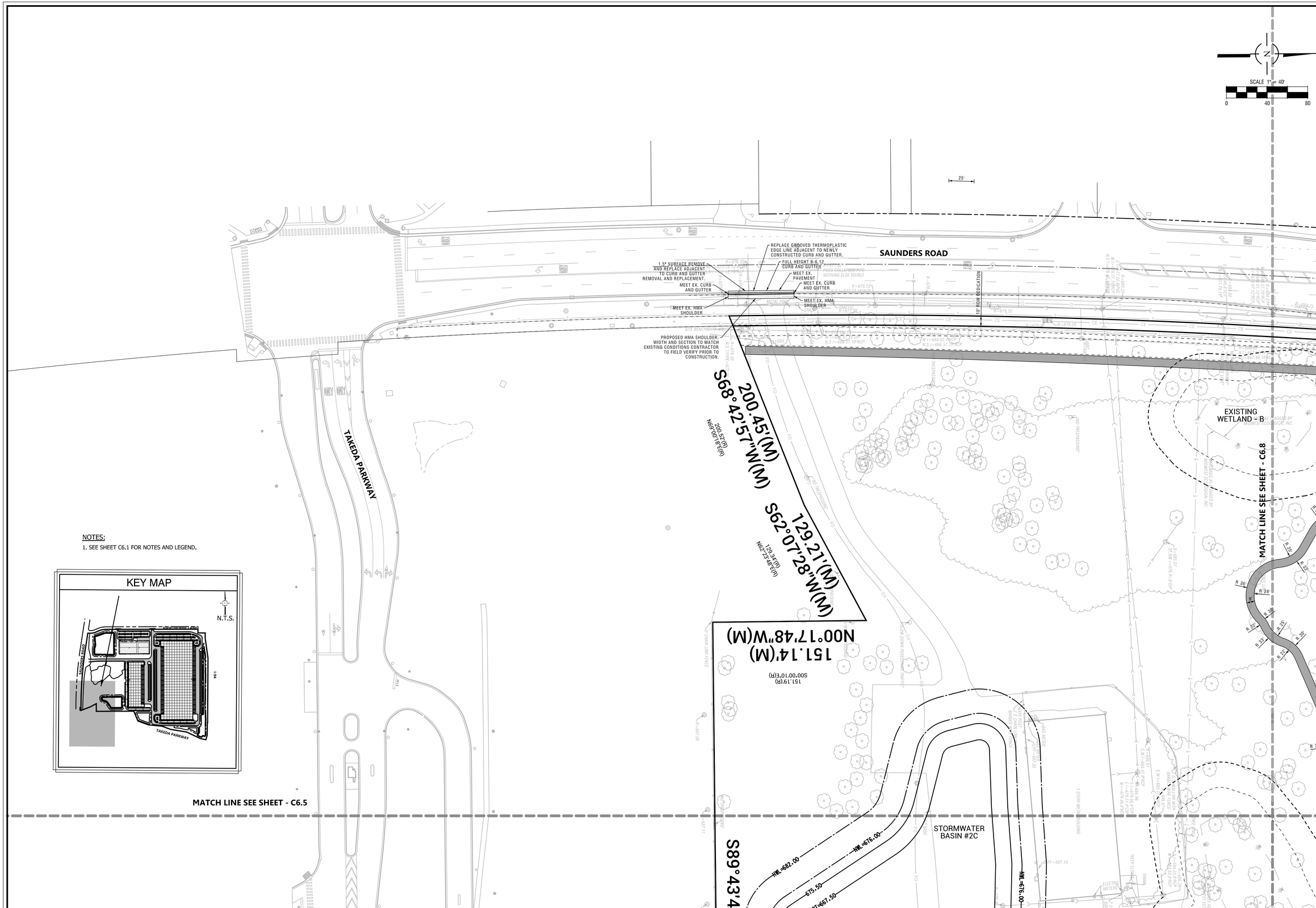

NOTES:

1. SEE SHEET C6.1 FOR NOTES AND LEGEND.

KEY MAP

NO.	DATE	REMARKS

NO.	DATE	REMARKS

GEOMETRIC PLAN - 7

BRIDGE POINT O'HARE NORTH
DEERFIELD, IL

CONSULTING ENGINEERS
SITE DEVELOPMENT ENGINEERS
LAND SURVEYORS
9575 W. Higgins Road, Suite 700,
Rosemont, Illinois 60018
Phone: (847) 696-4060 Fax: (847) 696-4065
SPACECO INC.

FILENAME: 12271GM7

DATE: 03/24/23

JOB NO. 12271

SHEET C6.7

N:\Projects 2022\12271\ENG\12271GM7.dgn Default User=shermanas

KEY MAP

N.T.S.

SCALE 1" = 40'

0 40 80

NOTES:

1. SEE SHEET C6.1 FOR NOTES AND LEGEND.

SAUNDERS ROAD

L=1241.76'(M)
R=7589.50'(M)
N04°09'36"E(M)
CH=1240.37'(M)

N08°50'48"E(M)
288.62'(M)

N89°53'30"E(M) 347.19'(M)

N08°50'48"E(M)
52.40'(M)

MATCH LINE SEE SHEET - C6.7

MATCH LINE SEE SHEET - C6.6

EXISTING WETLAND - A

STORMWATER BASIN #2D

HAWTHORNE LANE

MEET EX. CURB AND GUTTER

MEET EX. PAVEMENT

EXISTING MONUMENT SIGN TO BE REMOVED AND REPLACED WITH NEW SIGN. SEE ARCHITECTURAL PLANS FOR DESIGN AND DETAILS.

DEPRESSED CURB

8' CROSSWALK

10' WIDE DEPRESSED CURB

HC RAMP

HWL=682.00
NWL=676.00
675.50
BOT=667.50

L=115.19'(M)
R=125.00'(M)
N77°51'43"E(M)
CH=114.35'(M)

46.28'(M)
N65°51'48"E(M)

L=178.23'(M)
R=372.29'(M)
N77°47'45"E(M)
CH=156.03'(M)

NO.	DATE	REMARKS

NO.	DATE	REMARKS

GEOMETRIC PLAN - 8

BRIDGE POINT O'HARE NORTH
DEERFIELD, IL

CONSULTING ENGINEERS
SITE DEVELOPMENT ENGINEERS
LAND SURVEYORS
9575 W. Higgins Road, Suite 700,
Rosemont, Illinois 60018
Phone: (847) 696-4060 Fax: (847) 696-4065

SPACECO INC.

FILENAME: 12271GM8

DATE: 03/24/23

JOB NO. 12271

SHEET C6.8

28 OF 63

N:\Projects 2022\12271\ENG\12271GM8.dgn Default User=shermanas

MATCH LINE SEE SHEET - C7.3

MATCH LINE SEE SHEET - C7.2

KEY MAP

SHEET LOCATION

N.T.S.

TAKEDA PARKWAY

I-94

SCALE 1" = 40'

0 40 80

LEGEND

FF	FINISHED FLOOR
	DRAINAGE DIVIDE
T/W=XXX.XX B/W=XXX.XX	TOP OF WALL BOTTOM OF WALL
x 000.00	SPOT GRADE (FINISHED GRADE)
x 000.00±	MEET EXISTING GRADE
	CONCRETE SIDEWALK HC RAMP (5' WIDE UNLESS NOTED)
	STANDARD PITCH (PITCH IN) CURB AND GUTTER
	REVERSE PITCH (PITCH OUT) CURB AND GUTTER
	DEPRESSED CURB
	FLOW DIRECTION
	OVERLAND FLOW ROUTE

NOTES:

1. ADD 600 TO ELEVATIONS SHOWN AS XX.XX.
2. ALL CURB AND GUTTER IS REVERSE PITCH (PITCH OUT) UNLESS NOTED OTHERWISE.
3. ALL SPOT GRADES ALONG CURB LINE ARE EDGE OF PAVEMENT UNLESS NOTED OTHERWISE.
4. EXISTING ELEVATIONS SHOWN AS XXX.XX+/- SHALL MEET THE EXISTING GRADE. CONTRACTOR TO FIELD VERIFY ELEVATIONS PRIOR TO CONSTRUCTION AND NOTIFY ENGINEER OF ANY DESCREPANCIES.

STORMWATER MANAGEMENT SUMMARY

2YR, 24HR EVENT

DETENTION REQUIRED FOR BASIN #1 = 2.870 AC-FT

DETENTION REQUIRED FOR BASIN #2A-2D = 14.038 AC-FT

TOTAL REQUIRED = 16.908 AC-FT

TOTAL PROVIDED = 18.074 AC-FT

100YR, 24 HR EVENT

DETENTION REQUIRED FOR BASIN #1 = 6.133 AC-FT

DETENTION REQUIRED FOR BASIN #2A-2D = 42.009 AC-FT

DEPRESSIONAL STORAGE VOLUME LOST = 0.162 AC-FT

TOTAL REQUIRED = 48.439 AC-FT

TOTAL PROVIDED = 57.636 AC-FT

PROPOSED BUILDING C FF=687.00

STORMWATER BASIN #2A
HWL=682.00
NWL=676.00
BOT=675.50

STORMWATER BASIN #1
HWL=678.70
NWL=675.70
BOT=675.20

18' TRANSITION BETWEEN DEPRESSED AND FULL HEIGHT CURB

170' OVERFLOW WEIR

T/BERM=680.70

NO.	DATE	REMARKS

NO.	DATE	REMARKS

GRADING PLAN - 1

BRIDGE POINT O'HARE NORTH
DEERFIELD, IL

CONSULTING ENGINEERS
SITE DEVELOPMENT ENGINEERS
LAND SURVEYORS

9575 W. Higgins Road, Suite 700,
Rosemont, Illinois 60018
Phone: (847) 696-4060 Fax: (847) 696-4065

SPACECO INC.

FILENAME: 12271GR1

DATE: 03/24/23

JOB NO. 12271

SHEET C7.1

29 OF 63

N:\Projects 2022\12271\ENG\12271GR1.dgn Default User=shermanas

MATCH LINE SEE SHEET - C7.4

MATCH LINE SEE SHEET - C7.1

PROPOSED
BUILDING C
FF=687.00

HAWTHORNE LANE

18' TRANSITION BETWEEN DEPRESSED AND FULL HEIGHT CURB

9' TRANSITION BETWEEN DEPRESSED AND FULL HEIGHT CURB

STORMWATER
BASIN #1
HWL=678.70
NWL=675.70
BOT=675.20

T/BERM=680.70

230' OVERFLOW WEIR

I-94

SCALE 1" = 40'

0 40 80

NOTES:

1. SEE SHEET C7.1 FOR NOTES AND LEGEND.

KEY MAP

SHEET LOCATION

N.T.S.

SAUNDERS ROAD

I-94

TAKEDA PARKWAY

NO.	DATE	REMARKS

NO.	DATE	REMARKS

GRADING PLAN - 2

BRIDGE POINT O'HARE NORTH
DEERFIELD, IL

CONSULTING ENGINEERS
SITE DEVELOPMENT ENGINEERS
LAND SURVEYORS

9575 W. Higgins Road, Suite 700,
Rosemont, Illinois 60018
Phone: (847) 696-4060 Fax: (847) 696-4065

SPACECO INC.

FILENAME:
12271GR2

DATE:
03/24/23

JOB NO.
12271

SHEET
C7.2
30 OF 63

N:\Projects 2022\1227\1\ENG\12271GR2.dgn Default User=shermanas

MATCH LINE SEE SHEET - C7.5

NOTES:

1. SEE SHEET C7.1 FOR NOTES AND LEGEND.

KEY MAP

SHEET LOCATION

N.T.S.

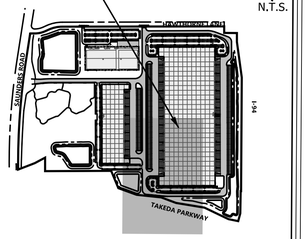

MATCH LINE SEE SHEET - C7.1

STORMWATER BASIN #2B
HWL=682.00
NWL=676.00
BOT=675.50

PROPOSED BUILDING B
FF=687.00

PROPOSED BUILDING C
FF=687.00

SCALE 1" = 40'
0 40 80

TAKEDA PARKWAY

18" TRANSITION BETWEEN DEPRESSED AND FULL HEIGHT CURB

LOWERED/STEPPED FOUNDATION. SEE ARCHITECTURAL AND STRUCTURAL PLANS FOR DESIGN AND DETAILS.

MATCH LINE SEE SHEET - C7.4

NO.	DATE	REMARKS

GRADING PLAN - 3

BRIDGE POINT O'HARE NORTH
DEERFIELD, IL

CONSULTING ENGINEERS
SITE DEVELOPMENT ENGINEERS
LAND SURVEYORS

9575 W. Higgins Road, Suite 700,
Rosemont, Illinois 60018
Phone: (847) 696-4060 Fax: (847) 696-4065

SPACECO INC.

FILENAME: 12271GR3

DATE: 03/24/23

JOB NO. 12271

SHEET C7.3

31 OF 63

N:\Projects 2022\1227\ENG\12271GR3.dgn Default User=shermanas

PROPOSED BUILDING B FF = 687.00

PROPOSED BUILDING A FF = 687.00

PROPOSED BUILDING C FF = 687.00

MATCH LINE SEE SHEET - C7.6

MATCH LINE SEE SHEET - C7.3

MATCH LINE SEE SHEET - C7.2

LOWERED/STEPPED FOUNDATION. SEE ARCHITECTURAL AND STRUCTURAL PLANS FOR DESIGN AND DETAILS.

18" TRANSITION BETWEEN DEPRESSED AND FULL HEIGHT CURB

HAWTHORNE LANE

TAKEDA PARKWAY

SAUNDERS ROAD

KEY MAP

SHEET LOCATION

N.T.S.

SCALE 1" = 40'

0 40 80

NOTES:

1. SEE SHEET C7.1 FOR NOTES AND LEGEND.

NO.	DATE	REMARKS

NO.	DATE	REMARKS

GRADING PLAN - 4

BRIDGE POINT O'HARE NORTH

DEERFIELD, IL

CONSULTING ENGINEERS
SITE DEVELOPMENT ENGINEERS
LAND SURVEYORS

9575 W. Higgins Road, Suite 700,
Rosemont, Illinois 60018
Phone: (847) 696-4060 Fax: (847) 696-4065

SPACECO INC.

FILENAME: 12271GR4

DATE: 03/24/23

JOB NO. 12271

SHEET C7.4

32 OF 63

MATCH LINE SEE SHEET - C7.7

MATCH LINE SEE SHEET - C7.6

MATCH LINE SEE SHEET - C7.3

TAKEDA PARKWAY

STORMWATER BASIN #2C
HWL=682.00
NWL=676.00
BOT=667.50

STORMWATER BASIN #2B
HWL=682.00
NWL=676.00
BOT=675.50

EXISTING WETLAND - D

PROPOSED BUILDING B
FF=687.00

18' TRANSITION BETWEEN DEPRESSED AND FULL HEIGHT CURB

10' TRANSITION BETWEEN DEPRESSED AND FULL HEIGHT CURB

LOWERED/STEPPED FOUNDATION. SEE ARCHITECTURAL AND STRUCTURAL PLANS FOR DESIGN AND DETAILS.

DOOR=687.00

GR=686.50

GR=686.70

GR=682.70

R=687.00

R=684.50

R=685.90

R=684.60

R=685.00

R=682.35

R=681.50

R=684.80

I=676.00

I=675.50

SCALE 1" = 40'
0 40 80

NOTES:
1. SEE SHEET C7.1 FOR NOTES AND LEGEND.

KEY MAP
SHEET LOCATION
N.T.S.
TAKEDA PARKWAY
SAUNDERS ROAD
I-94

NO.	DATE	REMARKS

NO.	DATE	REMARKS

GRADING PLAN - 5

BRIDGE POINT O'HARE NORTH

DEERFIELD, IL

CONSULTING ENGINEERS
SITE DEVELOPMENT ENGINEERS
LAND SURVEYORS

9575 W. Higgins Road, Suite 700,
Rosemont, Illinois 60018
Phone: (847) 696-4060 Fax: (847) 696-4065

SPACECO INC.

FILENAME: 12271GR5

DATE: 03/24/23

JOB NO. 12271

SHEET C7.5
33 OF 63

N:\Projects 2022\12271\ENG\12271GR5.dgn Default User=shermanas

SCALE 1" = 40'

0 40 80

NOTES:

1. SEE SHEET C7.1 FOR NOTES AND LEGEND.

MATCH LINE SEE SHEET - C7.5

MATCH LINE SEE SHEET - C7.8

MATCH LINE SEE SHEET - C7.4

EXISTING WETLAND - D

EXISTING WETLAND - C

STORMWATER BASIN #2D
HWL=682.00
NWL=676.00
BOT=667.50

PROPOSED BUILDING A
FF=687.00

PROPOSED BUILDING B
FF=687.00

HAWTHORNE LANE

TAXEDA PARKWAY

18" TRANSITION BETWEEN DEPRESSED AND FULL HEIGHT CURB

LOWERED STEPPED FOUNDATION, SEE ARCHITECTURAL AND STRUCTURAL PLANS FOR DESIGN AND DETAILS.

KEY MAP

N.T.S.

NO.	DATE	REMARKS

NO.	DATE	REMARKS

GRADING PLAN - 6

BRIDGE POINT O'HARE NORTH
DEERFIELD, IL

CONSULTING ENGINEERS
SITE DEVELOPMENT ENGINEERS
LAND SURVEYORS

9575 W. Higgins Road, Suite 700,
Rosemont, Illinois 60018
Phone: (847) 696-4060 Fax: (847) 696-4065

SPACECO INC.

FILENAME: 12271GR6

DATE: 03/24/23

JOB NO. 12271

SHEET **C7.6**

34 OF 63

N:\Projects 2022\12271\ENG\12271GR6.dgn Default User=shermanas

SCALE 1" = 40'

0 40 80

SAUNDERS ROAD

TAKEDA PARKWAY

EXISTING WETLAND - B

MATCH LINE SEE SHEET - C7.8

MATCH LINE SEE SHEET - C7.5

STORMWATER BASIN #2C
HWL=682.00
NWL=676.00
BOT=667.50

NOTES:

1. SEE SHEET C7.1 FOR NOTES AND LEGEND.

KEY MAP

N.T.S.

SAUNDERS ROAD

I-94

TAKEDA PARKWAY

NO.	DATE	REMARKS

NO.	DATE	REMARKS

GRADING PLAN - 7

BRIDGE POINT O'HARE NORTH
DEERFIELD, IL

CONSULTING ENGINEERS
SITE DEVELOPMENT ENGINEERS
LAND SURVEYORS

9575 W. Higgins Road, Suite 700,
Rosemont, Illinois 60018
Phone: (847) 696-4060 Fax: (847) 696-4065

SPACECO INC.

FILENAME: 12271GR7

DATE: 03/24/23

JOB NO. 12271

SHEET **C7.7**

35 OF 63



NO.	DATE	REMARKS

NO.	DATE	REMARKS

GRADING PLAN - 8

BRIDGE POINT O'HARE NORTH
DEERFIELD, IL

CONSULTING ENGINEERS
SITE DEVELOPMENT ENGINEERS
LAND SURVEYORS

9575 W. Higgins Road, Suite 700,
Rosemont, Illinois 60018
Phone: (847) 696-4060 Fax: (847) 696-4065

SPACECO INC.

FILENAME: 12271GR8

DATE: 03/24/23

JOB NO. 12271

SHEET **C7.8**

35 OF 63

N:\Projects 2022\12271\ENG\12271GR8.dgn Default User=shermanas

MATCH LINE SEE SHEET - C8.3

MATCH LINE SEE SHEET - C8.2

KEY MAP

SHEET LOCATION

N.T.S.

TAKEDA PARKWAY

PROPOSED BUILDING C FF = 687.00

SCALE 1" = 40'

0 40 80

STORMWATER BASIN #2A
HWL=682.00
NWL=676.00
BOT=675.50

STORMWATER BASIN #1
HWL=678.70
NWL=675.70
BOT=675.20

I-94

NOTES:

1. ALL STORM SEWERS SHALL BE RCP CL-IV UNLESS NOTED OTHERWISE.
2. ALL SANITARY SEWERS SHALL BE PVC SDR 26 UNLESS NOTED OTHERWISE.
3. ALL WATER MAINS SHALL BE D.I.P.-CLASS 52 UNLESS NOTED OTHERWISE. MEGALUGS AND THRUST BLOCKS ARE REQUIRED FOR ALL WATERMAIN FITTINGS.
4. INDICATES TRENCH BACKFILL REQUIRED.
5. FRAME AND GRATE/LID FOR STORM SEWER STRUCTURES.

   1C - MANHOLE-NEENAH R-2504-C FRAME WITH TYPE "B" CLOSED LID
   1P - INLET, CATCH BASIN-NEENAH R-2504-C WITH TYPE "D" GRATE
   1G - INLET, CATCH BASIN - NEENAH R-4340-B OPEN LID
   2G - NEENAH

6. ELEVATIONS SHOWN AS XXX.XX± OR M/E SHALL MEET THE EXISTING GRADE. CONTRACTOR TO FIELD VERIFY ELEVATIONS PRIOR TO CONSTRUCTION AND NOTIFY ENGINEER OF ANY DISCREPANCIES.
7. DESIGN OF WIRING AND CIRCUITRY OF LIGHTING WILL BE BY OTHERS.
8. ALL RESTRAINED WATER MAIN JOINTS SHALL BE U.S. PIPE "FIELD LOK" GASKET OR APPROVED EQUAL.
9. FRENCH DRAIN: ALL LOW POINT STORM STRUCTURES ARE TO HAVE FOUR 1" DIAMETER WEEP HOLES PROVIDED 24" BELOW THE TOP OF LID. THE HOLES SHALL BE COVERED WITH A GEOTEXTILE FILTER FABRIC CEMENTED IN PLACE WITH BITUMINOUS MASTIC. THE DRAIN SHALL BE BACKFIELD WITH BEDDING OR CA-7 CRUSHED STONE TO TOP OF SUBGRADE OR BOTTOM OF SOIL.
10. CONTRACTOR TO COORDINATE FINAL UTILITY (SANITARY, STORM, WATER) SERVICE LOCATIONS, SIZES, AND INVERT ELEVATIONS WITH MEP PLAN PRIOR TO CONSTRUCTION. NOTIFY ENGINEER OF ANY DISCREPANCIES.

STORM STRUCTURE LEGEND

STRUCTURE ABBREVIATION
STRUCTURE NUMBER
M-100
A4D,1P
FRAME AND LID TYPE
DIAMETER & SIZE OF STRUCTURE
TYPE OF STRUCTURE

STORM STRUCTURE ABBREVIATIONS

I = INLET
CB = CATCH BASIN
M = MANHOLE
E = FLARED END SECTION

NO.	DATE	REMARKS

NO.	DATE	REMARKS

UTILITY PLAN - 1

BRIDGE POINT O'HARE NORTH
DEERFIELD, IL

CONSULTING ENGINEERS
SITE DEVELOPMENT ENGINEERS
LAND SURVEYORS

9575 W. Higgins Road, Suite 700,
Rosemont, Illinois 60018
Phone: (847) 696-4060 Fax: (847) 696-4065

SPACECO INC.

FILENAME: 12271UT1

DATE: 03/24/23

JOB NO. 12271

SHEET C8.1

37 OF 63

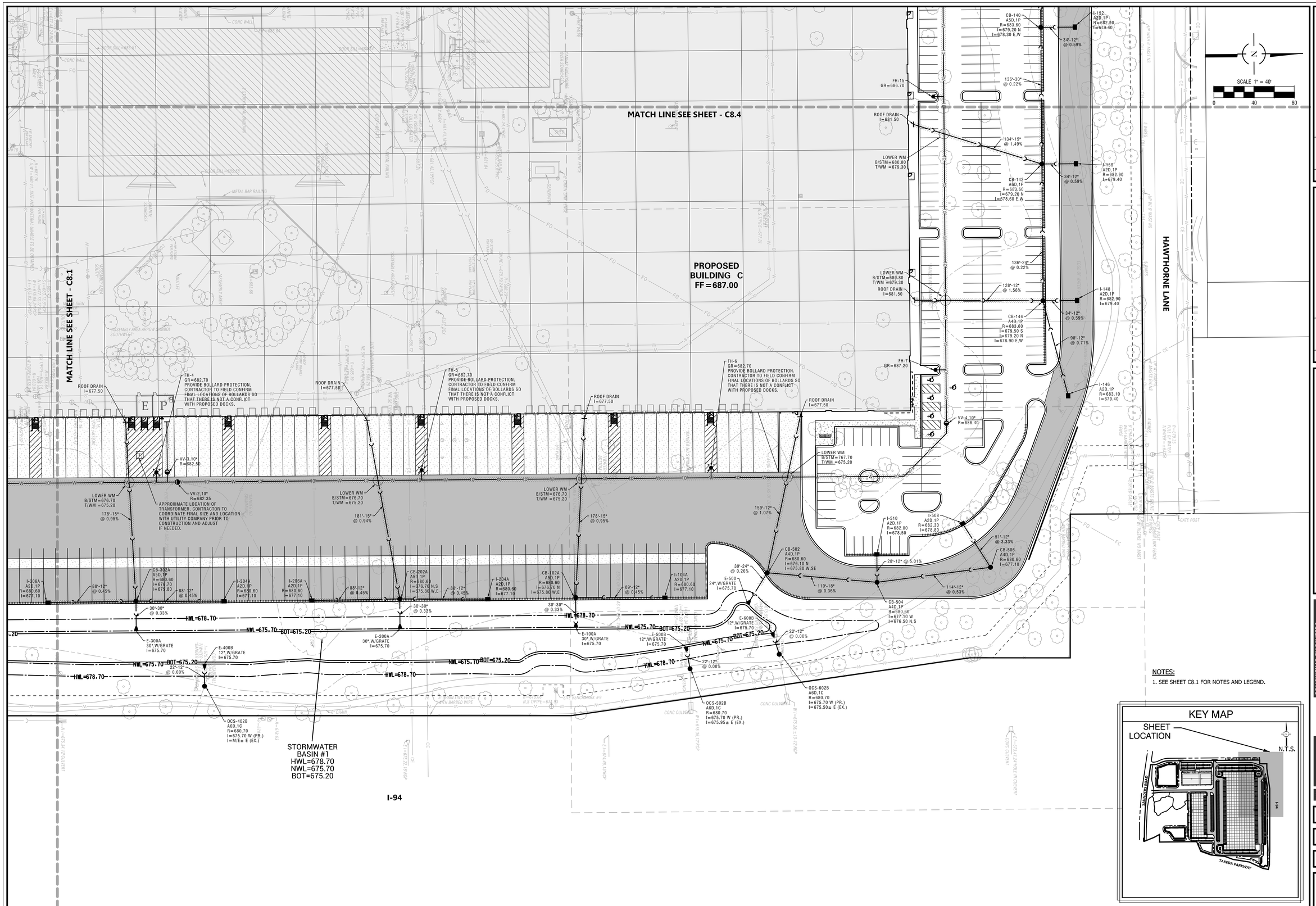

NOTES:

1. SEE SHEET C8.1 FOR NOTES AND LEGEND.

KEY MAP

NO.	DATE	REMARKS

NO.	DATE	REMARKS

UTILITY PLAN - 2

BRIDGE POINT O'HARE NORTH
DEERFIELD, IL

CONSULTING ENGINEERS
SITE DEVELOPMENT ENGINEERS
LAND SURVEYORS
9575 W. Higgins Road, Suite 700,
Rosemont, Illinois 60018
Phone: (847) 696-4060 Fax: (847) 696-4065
SPACECO INC.

FILENAME: 12271UT2

DATE: 03/24/23

JOB NO. 12271

SHEET C8.2

38 OF 63

N:\Projects 2022\12271\ENG\12271UT2.dgn Default User=shermanas

MATCH LINE SEE SHEET - C8.5

NOTES:

1. SEE SHEET C8.1 FOR NOTES AND LEGEND.

KEY MAP

SHEET LOCATION

N.T.S.

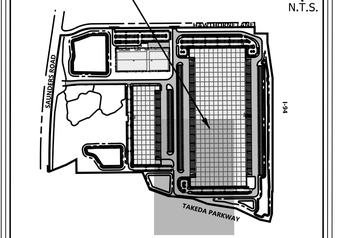

STORMWATER BASIN #2B
HWL=682.00
NWL=676.00
BOT=675.50

PROPOSED BUILDING B
FF=687.00

PROPOSED BUILDING C
FF=687.00

TAKEDA PARKWAY

MATCH LINE SEE SHEET - C8.1

MATCH LINE SEE SHEET - C8.4

SCALE 1" = 40'

0 40 80

BRIDGE POINT O'HARE NORTH
DEERFIELD, IL

UTILITY PLAN - 3

NO. DATE REMARKS

NO. DATE REMARKS

NO. DATE REMARKS

CONSULTING ENGINEERS
SITE DEVELOPMENT ENGINEERS
LAND SURVEYORS

9575 W. Higgins Road, Suite 700,
Rosemont, Illinois 60018
Phone: (847) 696-4060 Fax: (847) 696-4065

SPACECO INC.

FILENAME: 12271UT3

DATE: 03/24/23

JOB NO. 12271

SHEET C8.3

39 OF 63

N:\Projects 2022\1227\ENG\12271UT3.dgn Default User=shermanas

PROPOSED BUILDING B FF = 687.00

PROPOSED BUILDING A FF = 687.00

PROPOSED BUILDING C FF = 687.00

MATCH LINE SEE SHEET - C8.6

MATCH LINE SEE SHEET - C8.3

MATCH LINE SEE SHEET - C8.2

WATERMAIN SHALL BE INSTALLED AT TOP OF PIPE ELEVATION 676.00, TYPICAL - EXCEPT AT CROSSINGS

WATERMAIN WEST OF THIS POINT SHALL BE INSTALLED AT TOP OF PIPE ELEVATION 676.00, TYPICAL - EXCEPT AT CROSSINGS

HAWTHORNE LANE

SCALE 1" = 40'

0 40 80

NOTES:

1. SEE SHEET C8.1 FOR NOTES AND LEGEND.

KEY MAP

SHEET LOCATION

N.T.S.

SAUNDERS ROAD

TAKEDA PARKWAY

NO.	DATE	REMARKS

UTILITY PLAN - 4

BRIDGE POINT O'HARE NORTH

DEERFIELD, IL

CONSULTING ENGINEERS
SITE DEVELOPMENT ENGINEERS
LAND SURVEYORS

9575 W. Higgins Road, Suite 700,
Rosemont, Illinois 60018
Phone: (847) 696-4060 Fax: (847) 696-4065

SPACECO INC.

FILENAME: 12271UT4

DATE: 03/24/23

JOB NO. 12271

SHEET C8.4

40 OF 63

N:\Projects 2022\12271\ENG\12271UT4.dgn Default User=shermanas

MATCH LINE SEE SHEET - C8.7

TAKEDA PARKWAY

STORMWATER BASIN #2C
HWL=682.00
NWL=676.00
BOT=667.50

HWL=682.00
NWL=676.00
675.50
BOT=667.50

EXISTING WETLAND - D

MATCH LINE SEE SHEET - C8.6

SCALE 1" = 40'
0 40 80

E-706
48"-W/GRATE
I=676.00

54'-48"
EQUALIZER
PIPE @ 0.00%

E-300
54"-W/GRATE
I=675.50

E-900A
12"-W/GRATE
I=676.00

E-600
48"-W/GRATE
I=676.00

BOT=667.50
675.50
NWL=676.00
HWL=682.00

44'-12"
@ 3.04%

CB-902A
A4D-1P
R=684.50
I=680.50 E
I=677.40 W

55'-48"
EQUALIZER
PIPE @ 0.00%

E-800A
12"-W/GRATE
I=684.00

CB-604
A6D-1P
R=684.50
I=676.00

112'-48"
EQUALIZER
PIPE @ 0.00%

CB-606
A6D-1P
R=684.80
I=676.00

CB-704
A6D-1P
R=687.00
I=676.00

103'-54"
@ 0.05%

CB-302
A7D-1P
R=684.80
I=675.55

231'-48"
EQUALIZER
PIPE @ 0.00%

73'-12"
@ 1.37%

LOWER WM
B/STM=680.80
T/WM =679.30

VV-13.10"
R=685.90

CB1602
A7D-1P
R=684.50
I=676.00

168'-48"
EQUALIZER
PIPE @ 0.00%

B/STM=684.10
T/WM =680.40

67'-12"PIP
@ 0.44%

I-802A
A2D-1P
R=686.30
I=684.30

10'-12"PIP
@ 1.00%

FH-24
GR=686.50

ROOF DRAIN
I=681.50

FH-25
GR=686.50

ROOF DRAIN
I=684.40

94'-54"
@ 0.05%

CB-304
A7D-1P
R=684.60
I=675.56

M-702
A6D-1C
R=685.90
I=676.00

61'-48"
EQUALIZER
PIPE @ 0.00%

145'-54"
@ 0.05%

HWL=682.00
NWL=676.00 BOT=675.50

E-700
48"-W/GRATE
I=676.00

CB-306
A7D-1P
R=684.60
I=675.66

PROPOSED
BUILDING B
FF=687.00

ROOF DRAIN
I=677.50

ROOF DRAIN
I=677.50

118'-54"
@ 0.05%

FH-12
GR=686.70

91'-5"
@ 1.54%

FH-13
GR=682.70
PROVIDE BOLLARD PROTECTION.
CONTRACTOR TO FIELD CONFIRM
FINAL LOCATIONS OF BOLLARDS SO
THAT THERE IS NOT A CONFLICT
WITH PROPOSED DOCKS.

95'-5"
@ 1.32%

FH-14
GR=682.70
PROVIDE BOLLARD PROTECTION.
CONTRACTOR TO FIELD CONFIRM
FINAL LOCATIONS OF BOLLARDS SO
THAT THERE IS NOT A CONFLICT
WITH PROPOSED DOCKS.

STORMWATER BASIN #2B
HWL=682.00
NWL=676.00
BOT=675.50

HWL=682.00

CB-305
A7D-1P
R=685.00
I=675.72

BOT=675.50

LOWER WM
B/STM=676.40
T/WM =674.90

VV-6.10"
R=682.35

85'-12"
@ 0.47%

CB-324
A4D-1P
R=681.50
I=677.60 W
I=676.25 W.E

LOWER WM
B/STM=676.50
T/WM =675.00

I-326
A2D-1P
R=681.50
I=678.00

85'-12"

NOTES:

1. SEE SHEET C8.1 FOR NOTES AND LEGEND.

KEY MAP

SHEET LOCATION

N.T.S.

SANDHILL ROAD

I-94

TAKEDA PARKWAY

MATCH LINE SEE SHEET - C8.3

NO.	DATE	REMARKS

NO.	DATE	REMARKS

UTILITY PLAN - 5

BRIDGE POINT O'HARE NORTH
DEERFIELD, IL

CONSULTING ENGINEERS
SITE DEVELOPMENT ENGINEERS
LAND SURVEYORS

9575 W. Higgins Road, Suite 700,
Rosemont, Illinois 60018
Phone: (847) 696-4060 Fax: (847) 696-4065

SPACECO INC.

FILENAME: 12271UT5

DATE: 03/24/23

JOB NO. 12271

SHEET C8.5

41 OF 63

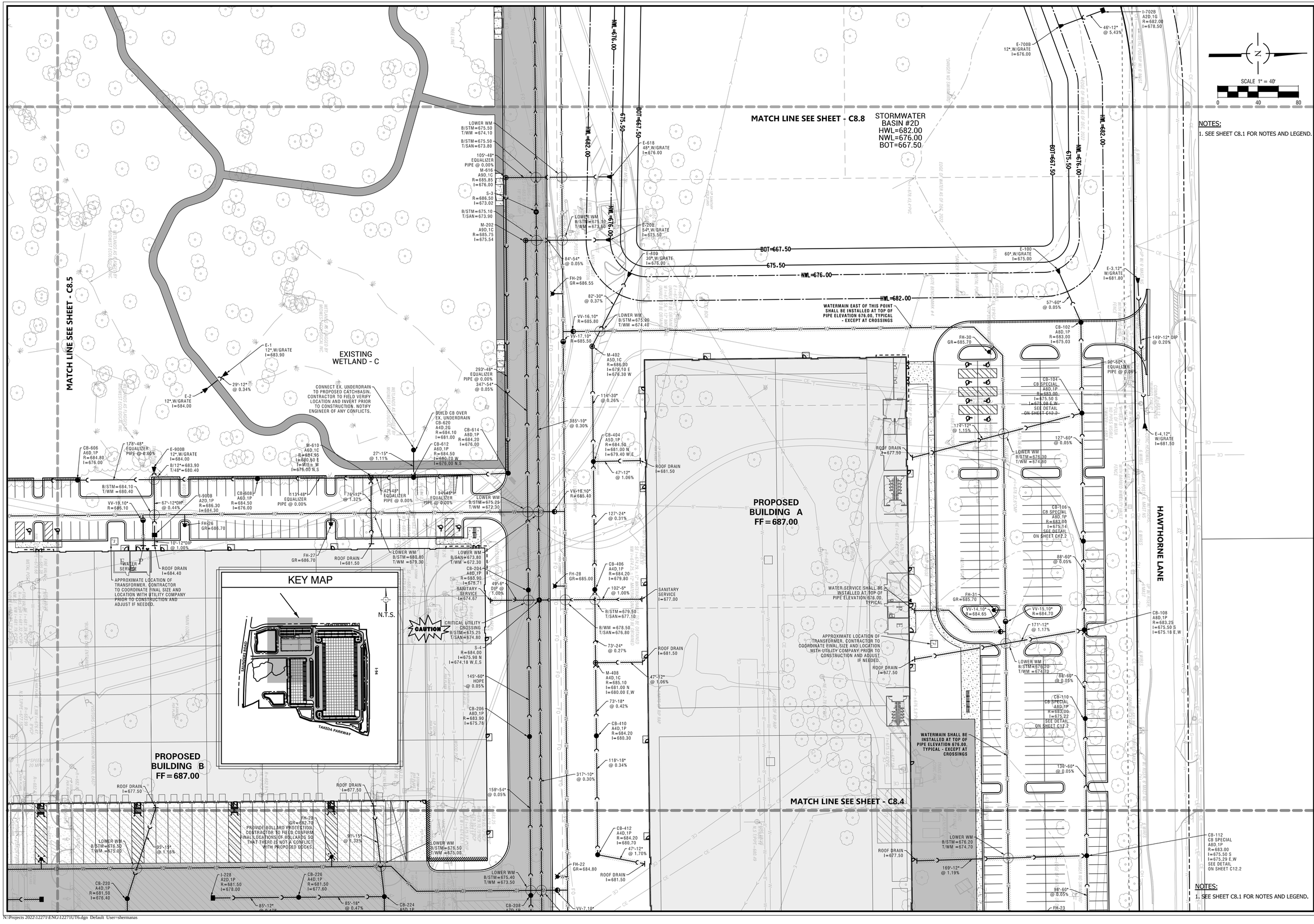

NOTES:

1. SEE SHEET C8.1 FOR NOTES AND LEGEND.

NO.	DATE	REMARKS

UTILITY PLAN - 6

BRIDGE POINT O'HARE NORTH
DEERFIELD, IL

CONSULTING ENGINEERS
SITE DEVELOPMENT ENGINEERS
LAND SURVEYORS

9575 W. Higgins Road, Suite 700,
Rosemont, Illinois 60018
Phone: (847) 696-4060 Fax: (847) 696-4065

SPACECO INC.

FILENAME:	12271UT6
DATE:	03/24/23
JOB NO.	12271
SHEET	C8.6
	42 OF 63

N:\Projects 2022\12271\ENG\12271UT6.dgn Default User=shermanas

SCALE 1" = 40'

0 40 80

SAUNDERS ROAD

TAKEDA PARKWAY

EXISTING WETLAND - B

MATCH LINE SEE SHEET - C8.8

MATCH LINE SEE SHEET - C8.5

STORMWATER BASIN #2C
HWL=682.00
NWL=676.00
BOT=667.50

NWL=682.00

NWL=676.00

675.50

BOT=667.50

NWL=676.00

NOTES:

1. SEE SHEET C8.1 FOR NOTES AND LEGEND.

KEY MAP

N.T.S.

SAUNDERS ROAD

I-94

TAKEDA PARKWAY

NO.	DATE	REMARKS

NO.	DATE	REMARKS

UTILITY PLAN - 7

BRIDGE POINT O'HARE NORTH

DEERFIELD, IL

CONSULTING ENGINEERS
SITE DEVELOPMENT ENGINEERS
LAND SURVEYORS

9575 W. Higgins Road, Suite 700,
Rosemont, Illinois 60018
Phone: (847) 696-4060 Fax: (847) 696-4065

SPACECO INC.

FILENAME: 12271UT7

DATE: 03/24/23

JOB NO. 12271

SHEET C8.7

43 OF 63

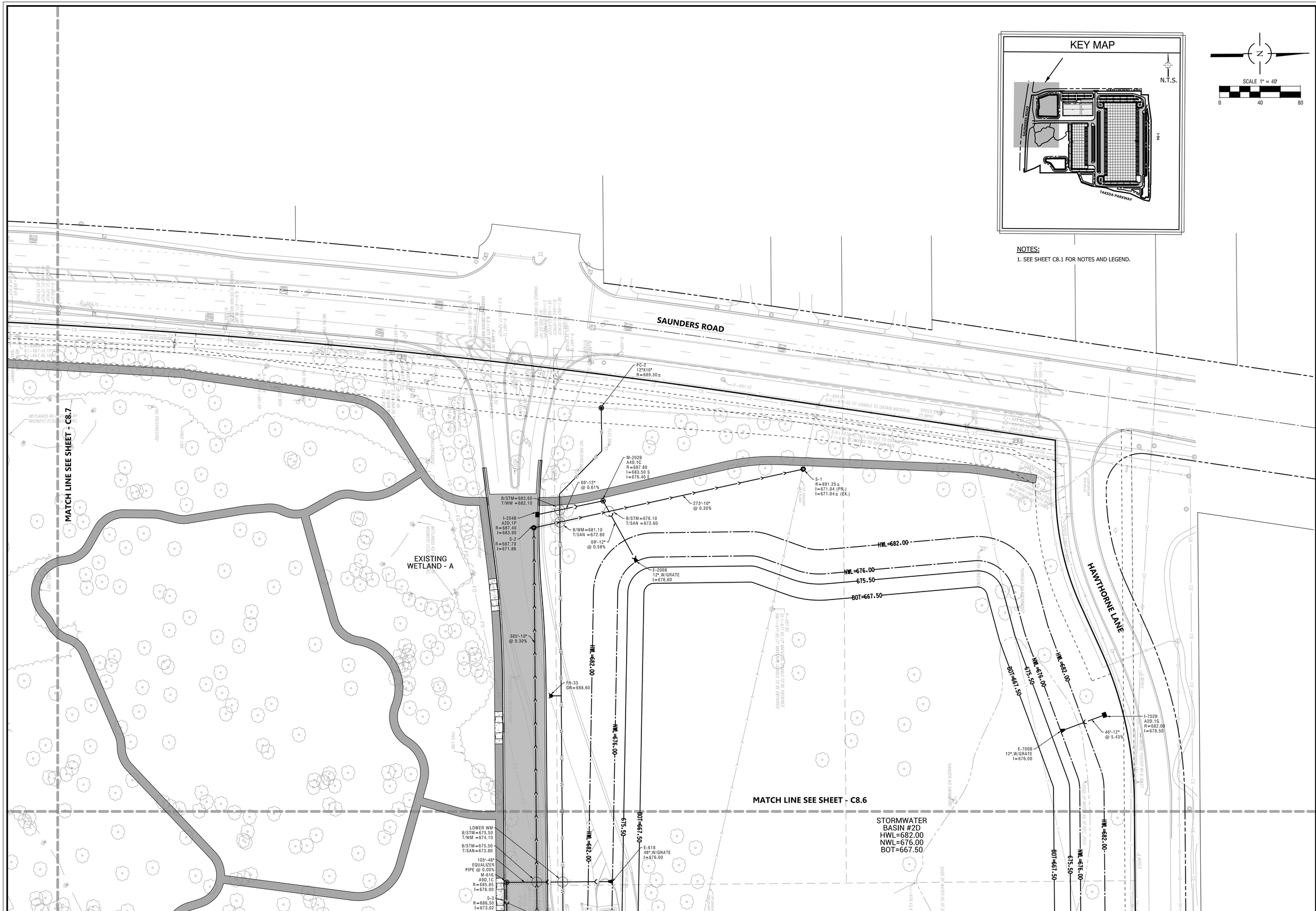

NO.	DATE	REMARKS

NO.	DATE	REMARKS

UTILITY PLAN - 8

BRIDGE POINT O'HARE NORTH

DEERFIELD, IL

CONSULTING ENGINEERS
SITE DEVELOPMENT ENGINEERS
LAND SURVEYORS

9575 W. Higgins Road, Suite 700,
Rosemont, Illinois 60018
Phone: (847) 696-4060 Fax: (847) 696-4065

SPACECO INC.

FILENAME: 12271UT8

DATE: 03/24/23

JOB NO. 12271

SHEET **C8.8**

44 OF 63

LEGEND

- WATER MAIN
- SANITARY SEWER
- STORM SEWER
- PROPOSED CL PROFILE
- EXISTING CL PROFILE

SCALE

1" = 40' HORIZ.
1" = 5' VERT.

NO.	DATE	REMARKS

NO.	DATE	REMARKS

NO.	DATE	REMARKS

SANITARY PLAN AND PROFILE - 1

BRIDGE POINT O'HARE NORTH
DEERFIELD, IL

CONSULTING ENGINEERS
SITE DEVELOPMENT ENGINEERS
LAND SURVEYORS
9575 W. Higgins Road, Suite 700,
Rosemont, Illinois 60018
Phone: (847) 698-4060 Fax: (847) 696-4065
SPACECO INC.

FILENAME: 12271PP01

DATE: 03/24/23

JOB NO. 12271

SHEET **C9.1**

45 OF 63

NO.	DATE	REMARKS

NO.	DATE	REMARKS

NO.	DATE	REMARKS

SANITARY PLAN AND PROFILE - 2

BRIDGE POINT O'HARE NORTH
DEERFIELD, IL

CONSULTING ENGINEERS
SITE DEVELOPMENT ENGINEERS
LAND SURVEYORS
9575 W. Higgins Road, Suite 700,
Rosemont, Illinois 60018
Phone: (847) 696-4060 Fax: (847) 696-4065
SPACECO INC.

FILENAME: 12271PP02

DATE: 03/24/23

JOB NO. 12271

SHEET **C9.2**
46 OF 63

MATCH LINE SEE SHEET - C10.3

MATCH LINE SEE SHEET - C10.2

PROPOSED BUILDING C

STORMWATER BASIN #2A

STORMWATER BASIN #1

SCALE 1" = 40'

0 40 80

LAKE COUNTY STORMWATER MANAGEMENT COMMISSION

TYPICAL CONSTRUCTION SEQUENCING

1.) Installation of soil erosion and sediment control SE/SC measures
  a.) Selective vegetation removal for silt fence installation
  b.) Silt fence installation
  c.) Construction fencing around areas not to be disturbed
  d.) Stabilized construction entrance
2.) Tree removal where necessary (clear & grub)
3.) Construct sediment trapping devices (sediment traps, basins…)
4.) Construct detention facilities and outlet control structure with restrictor & temporary perforated riser
5.) Strip topsoil, stockpile topsoil and grade site
6.) Temporarily stabilize topsoil stockpiles (seed and silt fence around toe of slope)
7.) Install storm sewer, sanitary sewer, water and associated inlet & outlet protection
8.) Permanently stabilize detention basins with seed and erosion control blanket
9.) Temporarily stabilize all areas including lots that have reached temporary grade
10.) Install roadways
11.) Permanently stabilize all outlot areas
12.) Install structures and grade individual lots
13.) Permanently stabilize lots
14.) Remove all temporary SE/SC measures after the site is stabilized with vegetation
* Soil erosion and sediment control maintenance must occur every two weeks and after every ½ or greater rainfall event

SYMBOL LEGEND

- SE — STABILIZED CONSTRUCTION ENTRANCE
- NORTH AMERICAN GREEN C-350 EROSION CONTROL BLANKET
- NORTH AMERICAN GREEN S-75-BN EROSION CONTROL BLANKET
- xx — SILT FENCE
- IP — INLET PROTECTION
- P — PAVING
- PS — PERMANENT SEEDING
- LA — LINED APRON
- CW — CONCRETE WASHOUT
- NP — NATIVE PLANTINGS - SEE LANDSCAPE PLANS
- PR — PERFORATED RISER

NOTES:

1. CONTRACTOR SHALL COORDINATE FINAL STABILIZATION WITH LANDSCAPE PLANS
2. CONCRETE WASHOUT AND STABILIZED CONSTRUCTION ENTRANCE ARE AS SHOWN FOR PLANNING PURPOSES AND FINAL PLACEMENT SHALL BE DETERMINED BY THE CONTRACTOR IN THE FIELD.
3. NORTH AMERICAN GREEN S-75 EROSION CONTROL BLANKET SHALL BE INSTALLED ON ALL FINISHED AREAS WHERE SLOPE IS GREATER THAN 6:1 AND AT ALL ADDITIONAL LOCATIONS INDICATED ON THE PLAN.
4. TYPICAL GREENSPACE SHALL BE FINISHED 6" TOPOSIL, SEED AND BLANKET. NATIVE PLANTED BASIN BOTTOMS SHALL BE 12" TOPSOIL.

I-94

NO.	DATE	REMARKS

NO.	DATE	REMARKS

SOIL EROSION & SEDIMENT CONTROL PLAN - 1

BRIDGE POINT O'HARE NORTH

DEERFIELD, IL

CONSULTING ENGINEERS
SITE DEVELOPMENT ENGINEERS
LAND SURVEYORS

9575 W. Higgins Road, Suite 700,
Rosemont, Illinois 60018
Phone: (847) 696-4060 Fax: (847) 696-4065

SPACECO INC.

FILENAME: 12271SE1

DATE: 03/24/23

JOB NO. 12271

SHEET **C10.1**

47 OF 63

N:\Projects 2022\1227\ENG\12271SE1.dgn Default User=shermanas

MATCH LINE SEE SHEET - C10.4

MATCH LINE SEE SHEET - C10.1

PROPOSED
BUILDING C

HAWTHORNE LANE

STORMWATER
BASIN #1

I-94

SCALE 1" = 40'
0 40 80

NOTES:
1. SEE SHEET C10.1 FOR NOTES AND LEGEND.

KEY MAP
SHEET LOCATION
N.T.S.
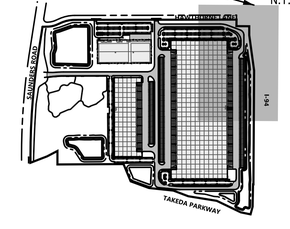

NO.	DATE	REMARKS

NO.	DATE	REMARKS

SOIL EROSION & SEDIMENT CONTROL PLAN - 2

BRIDGE POINT O'HARE NORTH

DEERFIELD, IL

CONSULTING ENGINEERS
SITE DEVELOPMENT ENGINEERS
LAND SURVEYORS
9575 W. Higgins Road, Suite 700,
Rosemont, Illinois 60018
Phone: (847) 696-4060 Fax: (847) 696-4065

SPACECO INC.

FILENAME: 12271SE2

DATE: 03/24/23

JOB NO. 12271

SHEET **C10.2**
48 OF 63

N:\Projects 2022\12271\ENG\12271SE2.dgn Default User=shermanas

MATCH LINE SEE SHEET - C10.5

STORMWATER BASIN #2B

PROPOSED BUILDING B

PROPOSED BUILDING C

TAKEDA PARKWAY

NOTES:

1. SEE SHEET C10.1 FOR NOTES AND LEGEND.

KEY MAP

SHEET LOCATION

N.T.S.

MATCH LINE SEE SHEET - C10.1

MATCH LINE SEE SHEET - C10.4

SCALE 1" = 40'

0 40 80

NO.	DATE	REMARKS

NO.	DATE	REMARKS

SOIL EROSION & SEDIMENT CONTROL PLAN - 3

BRIDGE POINT O'HARE NORTH

DEERFIELD, IL

CONSULTING ENGINEERS
SITE DEVELOPMENT ENGINEERS
LAND SURVEYORS

9575 W. Higgins Road, Suite 700,
Rosemont, Illinois 60018
Phone: (847) 696-4060 Fax: (847) 696-4065

SPACECO INC.

FILENAME: 12271SE3

DATE: 03/24/23

JOB NO. 12271

SHEET C10.3

49 OF 63

N:\Projects 2022\1227\ENG\1227ISE3.dgn Default User=shermanas

PROPOSED BUILDING B

MATCH LINE SEE SHEET - C10.6

PROPOSED BUILDING A

PROPOSED BUILDING C

MATCH LINE SEE SHEET - C10.3

MATCH LINE SEE SHEET - C10.2

HAWTHORNE LANE

SCALE 1" = 40'

0 40 80

NOTES:

1. SEE SHEET C10.1 FOR NOTES AND LEGEND.

KEY MAP

SHEET LOCATION

N.T.S.

SAUNDERS ROAD

I-94

TAKEDA PARKWAY

NO.	DATE	REMARKS

NO.	DATE	REMARKS

SOIL EROSION & SEDIMENT CONTROL PLAN - 4

BRIDGE POINT O'HARE NORTH

DEERFIELD, IL

CONSULTING ENGINEERS
SITE DEVELOPMENT ENGINEERS
LAND SURVEYORS

9575 W. Higgins Road, Suite 700,
Rosemont, Illinois 60018
Phone: (847) 696-4060 Fax: (847) 696-4065

SPACECO INC.

FILENAME: 12271SE4

DATE: 03/24/23

JOB NO. 12271

SHEET C6.4

50 OF 63

N:\Projects 2022\12271\ENG\12271SE4.dgn Default User=shermanas

MATCH LINE SEE SHEET - C10.7

MATCH LINE SEE SHEET - C10.3

MATCH LINE SEE SHEET - C10.6

TAKEDA PARKWAY

STORMWATER BASIN #2C

STORMWATER BASIN #2B

EXISTING WETLAND - D

PROPOSED BUILDING B

NWL=682.00

NWL=676.00

HWL=682.00

HWL=676.00

BOT=675.50

BOT=667.50

NOTES:

1. SEE SHEET C10.1 FOR NOTES AND LEGEND.

KEY MAP

SHEET LOCATION

N.T.S.

SCALE 1" = 40'

0 40 80

NO.	DATE	REMARKS

NO.	DATE	REMARKS

SOIL EROSION & SEDIMENT CONTROL PLAN - 5

BRIDGE POINT O'HARE NORTH

DEERFIELD, IL

CONSULTING ENGINEERS
SITE DEVELOPMENT ENGINEERS
LAND SURVEYORS

9575 W. Higgins Road, Suite 700,
Rosemont, Illinois 60018
Phone: (847) 696-4060 Fax: (847) 696-4065

SPACECO INC.

FILENAME: 12271SE5

DATE: 03/24/23

JOB NO. 12271

SHEET C10.5

51 OF 63

N:\Projects 2022\12271\ENG\12271SE5.dgn Default User=shermanas

MATCH LINE SEE SHEET - C10.5

MATCH LINE SEE SHEET - C10.8

MATCH LINE SEE SHEET - C10.4

EXISTING WETLAND - C

STORMWATER BASIN #2D

PROPOSED BUILDING A

PROPOSED BUILDING B

HAWTHORNE LANE

TAKEDA PARKWAY

BOT=667.50
675.50
NWL=676.00
HWL=682.00

I=684.00

KEY MAP

N.T.S.

SCALE 1" = 40'

0 40 80

NOTES:

1. SEE SHEET C10.1 FOR NOTES AND LEGEND.

NO.	DATE	REMARKS

NO.	DATE	REMARKS

SOIL EROSION & SEDIMENT CONTROL PLAN - 6

BRIDGE POINT O'HARE NORTH

DEERFIELD, IL

CONSULTING ENGINEERS
SITE DEVELOPMENT ENGINEERS
LAND SURVEYORS

9575 W. Higgins Road, Suite 700,
Rosemont, Illinois 60018
Phone: (847) 696-4060 Fax: (847) 696-4065

SPACECO INC.

FILENAME: 12271SE6

DATE: 03/24/23

JOB NO. 12271

SHEET C10.6

52 OF 63

N:\Projects 2022\1227\ENG\1227ISE6.dgn Default User=shermanas

SCALE 1" = 40'
0 40 80

SAUNDERS ROAD

TAKEDA PARKWAY

EXISTING WETLAND - B

STORMWATER BASIN #2C

MATCH LINE SEE SHEET - C10.8

MATCH LINE SEE SHEET - C10.5

NOTES:
1. SEE SHEET C10.1 FOR NOTES AND LEGEND.

KEY MAP
N.T.S.
SAUNDERS ROAD
I-94
TAKEDA PARKWAY

NO.	DATE	REMARKS

NO.	DATE	REMARKS

SOIL EROSION & SEDIMENT CONTROL PLAN - 7

BRIDGE POINT O'HARE NORTH

DEERFIELD, IL

CONSULTING ENGINEERS
SITE DEVELOPMENT ENGINEERS
LAND SURVEYORS

9575 W. Higgins Road, Suite 700,
Rosemont, Illinois 60018
Phone: (847) 696-4060 Fax: (847) 696-4065

SPACECO INC.

FILENAME: 12271SE7

DATE: 03/24/23

JOB NO. 12271

SHEET C10.7
53 OF 63

N:\Projects 2022\1227\ENG\12271SE7.dgn Default User=shermanas

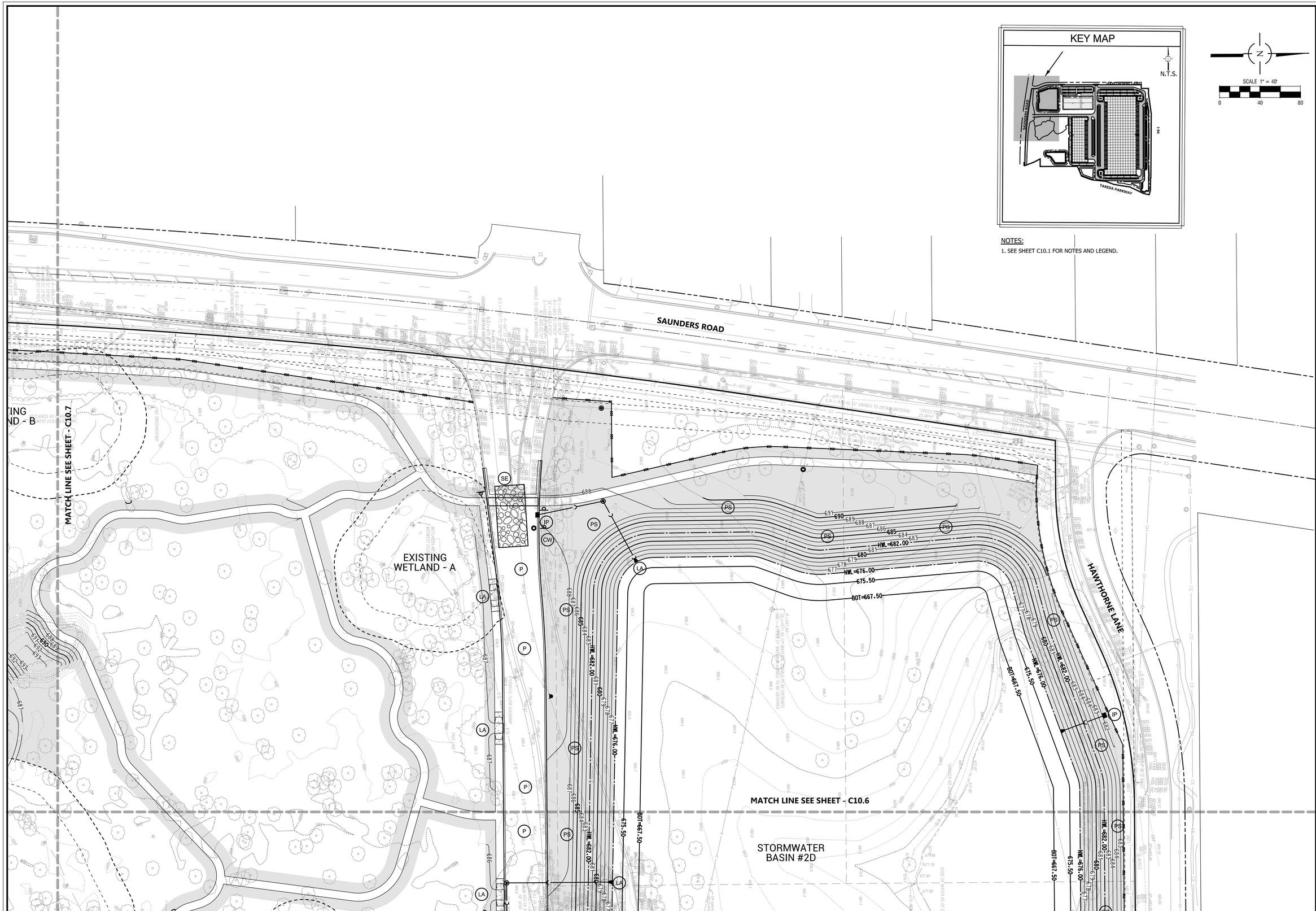

NO.	DATE	REMARKS

NO.	DATE	REMARKS

SOIL EROSION & SEDIMENT CONTROL PLAN - 8

BRIDGE POINT O'HARE NORTH

DEERFIELD, IL

CONSULTING ENGINEERS
SITE DEVELOPMENT ENGINEERS
LAND SURVEYORS

9575 W. Higgins Road, Suite 700,
Rosemont, Illinois 60018
Phone: (847) 696-4060 Fax: (847) 696-4065

SPACECO INC.

FILENAME: 12271SE8

DATE: 03/24/23

JOB NO. 12271

SHEET **C10.8**

54 OF 63

N:\Projects 2022\12271\ENG\12271SE8.dgn Default User=shermanas

This Soil Erosion & Sediment Control (SESC) Plan has been prepared to fulfill one of the requirements of the National Pollutant Discharge Elimination System (NPDES) General Permit No. ILR10____. The SESC Plan should be maintained on site as an integral component of the Storm Water Pollution Prevention Plan (SWPPP). The SWPPP, including the SESC Plan, should be amended whenever there is a change in design, construction, operation, or maintenance, which has a significant effect on the potential for the discharge of pollutants to the Waters of the State and which has not otherwise been addressed in the SWPPP. The SWPPP, shall also be amanded if it proves to be ineffective in eliminating or significantly minimizing pollutants, or in otherwise achieving the general objectives of controlling pollutants in storm water discharges associated with construction site activity. In addition, the SWPPP shall be amended to identify any new contractor and/or subcontractor that will implement a measure of the SWPPP.

1. SITE DESCRIPTION

A. The following is a description of the nature of the construction activity: Construction of 2 office/warehouses and a building for recreational use with associated detention basins and utilities.

B. The following is a description of the intended sequence of construction activities which will disturb soils for major portions of the construction site:

Describe proposed construction sequence, sample follows:

1) Install perimeter sediment control measures
  a) Selective vegetation removal for silt fence installation
  b) Silt fence installation
  c) Construction fencing around areas not to be disturbed
  d) Stabilized construction entrance
2) Clear and grub (as necessary)
3) Construct sediment trapping devices (sediment traps, sediment basins, etc.)
4) Construct detention facilities and outlet control structure with restrictor & temporary perforated riser
5) Strip topsoil, stockpile topsoil and grade site
6) Temporarily stabilize topsoil stockpiles (seed and silt fence around toe of slope)
7) Install storm sewer, sanitary sewer, watermain and associated inlet & outlet protection
8) Permanently stabilize detention basins with seed and erosion control blanket
9) Temporarily stabilize all areas including lots that have reached mass grade
10) Install roadways
11) Permanently stabilize all outlot areas
12) Install buildings and grade individual lots
13) Permanently stabilize lots
14) Remove all temporary soil erosion and sediment control measures after the site is stabilized with vegetation

C. The site has a total acreage of approximately____ acres. Construction activity will disturb approximately____ acres of the site.

D. 1) An estimated runoff coefficient of the site after construction activities are completed is 0.90 .
  2) Existing data describing the soil or quality of any discharge from the site is included in TSC SOILS REPORT FOR 1 BAXTER WAY DATED JANUARY 13, 2023.

E. Refer to Sheets C7.1-C7.8, C10.1-C10.8 for a site plan indicating;
  1) drainage patterns;
  2) approximate slopes anticipated before and after major grading activities;
  3) locations where vehicles enter or exit the site and controls to minimize off-site sediment tracking;
  4) areas of soil disturbance;
  5) the location of major structural and nonstructural controls;
  6) the location of areas where stabilization practices are expected to occur;
  7) surface waters (including wetlands); and,
  8) locations where storm water is discharged to a surface water.

F. 1) The name of the receiving water(s) is(are):_____
  2) The name of the ultimate receiving water is:_____
  3) The extent of wetland acreage at the site is_____

G. Potential sources of pollution associated with this construction activity may include:

- sediment from disturbed soils
- portable sanitary stations
- fuel tanks
- staging areas
- waste containers
- chemical storage areas
- oil or other petroleum products
- adhesives
- tar
- solvents
- detergents
- fertilizers
- raw materials (e.g., bagged portland cement)
- construction debris
- landscape waste
- concrete and concrete trucks
- litter

2. CONTROLS

This section of the SESC Plan addresses the various controls that should be implemented for each of the major construction activities described in the "Site Description" section. For each measure identified in the SWPPP, the contractor(s) or subcontractor(s) that will implement the measure should be identified. All contractors and subcontractors that are identified should be required to sign a copy of the certification statement from Part IV.F. of the ILR10 Permit (in accordance with Part VI.G. - Signatory Requirements, of the ILR10 Permit), All signed certification statements should be maintained in the SWPPP.

A. Approved State or Local Plans

The management practices, controls and other provisions contained in the SWPPP should be at least as protective as the requirements contained in the Illinois Environmental Protection Agency's (IEPA) and the United States Department of Agriculture's Natural Resource Conservation Service Illinois Urban Manual, 2012. Requirements specified in sediment and erosion control site plans or site permits or storm water management site plans or site permits approved by local officials that are applicable to protecting surface water resources are, upon submittal of a Notice of Intent (NOI) to be authorized to discharge under the ILR10 permit, incorporated by reference and are enforceable under the ILR10 permit even if they are not specifically included in a SWPPP required under the ILR10 permit. This provision does not apply to provisions of master plans, comprehensive plans, non-enforceable guidelines or technical guidance documents that are not identified in a specific plan or permit that is issued for the construction site.

The soil erosion and sediment control measures for this site should meet the requirements of the following agencies:

- VILLAGE OF DEERFIELD
- LAKE COUNTY PUBLIC WORKS
- LAKE COUNTY DIVISION OF TRANSPORTATION
- IEPA

B. Control Implementation Schedule

Best Management Practices will be implemented on an as-needed basis to protect water quality. Perimeter controls of the site should be installed prior to soil disturbance (excluding soil disturbance necessary to install the controls), including demolition activities. Perimeter controls, including the silt fence, should be actively maintained until final stabilization of those portions of the site upward of the perimeter control. Stabilized construction entrance(s) and sediment traps should be installed as described in the intended sequence of construction activities. The contractor is responsible for the adequate protection (including sediment control) of existing sewers and sewer structures during construction operations. As necessary, the appropriate sediment control measure should be installed prior to land disturbing activities.

Stabilization measures should be initiated where construction activities have temporarily or permanently ceased, in accordance with Local and State requirements, as described below. Once construction activity in an area has permanently ceased, that area should be permanently stabilized. Temporary perimeter controls should be removed after final stabilization of those portions of the site upward of the perimeter control.

C. Erosion and Sediment Controls

The appropriate soil erosion and sediment controls should be implemented on site and should be modified to reflect the current phase of construction. All temporary sediment and erosion control measures should be repaired or replaced as soon as practicable to maintain NPDES compliance. Permittee or an authorized agent is responsible for inspecting all sediment and erosion control measures at a minimum of every 7 calendar days and within 24 hours, or one working day, of the end of a 0.5-inch (or greater) rain event.

Unless otherwise indicated, all vegetative and structural erosion and sediment control practices should be installed to the Standard Practice. The contractor is responsible for the installation of any additional erosion and sediment control measures necessary to minimize erosion and sedimentation as determined by the Engineer or Primary Contact.

1) Stabilization Practices - Areas that will not be paved or covered with non-erosive material should be stabilized using procedures in substantial conformance with the Illinois Urban Manual. This SESC Plan includes site-specific soil erosion and sediment control measures. Additional erosion controls should be implemented as necessary, as determined by the Engineer or Primary Contact.

The following temporary and permanent stabilization practices, at a minimum, are proposed:

- permanent seeding
- erosion control blanket

Site-specific scheduling of the implementation of these practices is included in the Soil Protection Chart.
A record of the dates when major grading activities occur, when construction activities cease on a portion of the site, and when stabilization measures are initiated should be included in the SWPPP.

Stabilization of disturbed areas must be initiated within 1 working day of permanent or temporary cessation of earth activities and shall be completed as soon as possible but not later than 14 days from the initialization of stabilization work in an area. Exceptions to these time frames are specified below.

  a. Where the initiation of stabilization measures is precluded by snow cover, stabilization measures shall be initiated as soon as practicable.

  b. On areas where construction activity has temporarily ceased and will resume after 14 days, a temporary stabilization method can be used. Temporary stabilization techniques and materials shall conform to the SWPPP.

2) Structural Practices - Provided below is a description of structural practices that should be implemented, to the degree attainable to divert flows from exposed soils, store flows or otherwise limit runoff and the discharge of pollutants from exposed areas of the site. Structural practices should be placed on upland soils to the degree practicable. The installation of the following devices may be subject to Section 404 of the Clean Water Act:

- stabilized construction entrance
- silt fence
- sediment traps (provide locations and dimensions in plan set)

D. Storm Water Management

Provided below is a description of measures that will be installed during the construction process to control the pollutants in storm water discharges that will occur after the construction operations have been completed. The installation of these devices may be subject to Section 404 of the Clean Water Act.

1) The practices selected for implementation were determined on the basis of technical guidance contained in IEPA's Illinois Urban Manual, Federal, State, and/or Local Requirements. The storm water management measures include:

- detention basins (wet basins and dry basins)
- stormceptor

2) Velocity dissipation devices, such as rip-rap aprons at flared end sections or level spreaders, shall be placed at discharge locations and along the length of any outfall channel as necessary to provide a non-erosive velocity flow from the structure to a watercourse so that the natural, physical, and biological characteristics and functions are maintained and protected (e.g., maintenance of hydrologic conditions, such as the hydroperiod and hydrodynamics present prior to the initiation of construction activities).

E. Waste Management

Solid waste materials including trash, construction debris, excess construction materials, machinery, tools and other items will be collected and disposed of off site by the contractor. The contractor is responsible to acquire the permit required for such disposal. Burning on site will not be permitted. No solid materials, including building materials, shall be discharged to Waters of the State, except as authorized by a Section 404 permit. All waste materials should be collected and stored in approved receptacles. No wastes should be placed in any location other than in the approved containers appropriate for the materials being discarded. There should be no liquid wastes deposited into dumpsters or other containers which may leak. Receptacles with deficiencies should be replaced as soon as possible and the appropriate clean-up procedure should take place, if necessary. Construction waste material is not to be buried on site. Waste disposal should comply with all Local, State, and Federal regulations.

On-site hazardous material storage should be minimized and stored in labeled, separate receptacles from non-hazardous waste. All hazardous waste should be disposed of in the manner specified by Local or State regulation or by the manufacturer.

F. Concrete Waste Management

Concrete waste or washout should not be allowed in the street or allowed to reach a storm water drainage system or watercourse. When practicable, a slip should be posted at each location to identify the washout. To the extent practicable, concrete washout areas should be located a reasonable distance from a storm water drainage inlet or watercourse, and should be located at least 10 feet behind the curb, if the washout area is adjacent to a paved road. A stabilized entrance that meets Illinois Urban Manual standards should be installed at each washout area.

The containment facilities should be of sufficient volume to completely contain all liquid and concrete waste materials including enough capacity for anticipated levels of rainwater. The dried concrete waste material should be picked up and disposed of properly when 66% capacity is reached. Hardened concrete can be properly recycled and used again on site (as approved by the Engineer) or hauled off site to an appropriate landfill.

G. Concrete Cutting

Concrete waste management should be implemented to contain and dispose of saw-cutting slurries. Concrete cutting should not take place during or immediately after a rainfall event. Waste generated from

concrete cutting should be cleaned-up and disposed into the concrete washout facility as described above.

H. Vehicle Storage and Maintenance

When not in use, construction vehicles should be stored in a designated area(s) outside of the regulatory floodplain, away from any natural or created watercourse, pond, drainage-way or storm drain. Controls should be installed to minimize the potential of runoff from the storage area(s) from reaching storm drains or water courses. Vehicle maintenance (including both routine maintenance as well as on-site repairs) should be made within a designated area(s) to prevent the migration of mechanical fluids (oil, antifreeze, etc.) into watercourses, wetlands or storm drains. Drip pans or absorbent pads should be used for all vehicle and equipment maintenance activities that involve grease, oil, solvents, or other vehicle fluids. Construction vehicles should be inspected frequently to identify any leaks; leaks should be repaired immediately or the vehicle should be removed from site. Dispose of all used oil, antifreeze, solvents and other vehicle-related chemicals in accordance with United States Environmental Protection Agency (USEPA) and IEPA regulations and per Material Safety Data Sheet (MSDS) and/or manufacturer instructions. Contractors should immediately report spills to the Primary Contact.

I. Material Storage and Good Housekeeping

Materials and/or contaminants should be stored in a manner that minimizes the potential to discharge into storm drains or watercourses. An on-site area should be designated for material delivery and storage. All materials kept on site should be stored in their original containers with legible labels, and if possible, under a roof or other enclosure. Labels should be replaced if damaged or difficult to read. Bermed-off storage areas are an acceptable control measure to prevent contamination of storm water. MSDS should be available for referencing clean-up procedures. Any release of chemicals/contaminants should be immediately cleaned up and disposed of properly. Contractors should immediately report all spills to the Primary Contact, who should notify the appropriate agencies, if needed.

To reduce the risks associated with hazardous materials on site, hazardous products should be kept in original containers unless they are not re-sealable. The original labels and MSDS should be retained on site at all times. Hazardous materials and all other material on site should be stored in accordance with manufacturer or MSDS specifications. When disposing of hazardous materials, follow manufacturer or Local and State recommended methods.

The following good housekeeping practices should be followed on site during the construction project:

- An effort should be made to store only enough product required to do the job.

- All materials stored on site should be stored in a neat, orderly manner in their appropriate containers and adequately protected from the environment.

- Products should be kept in their original containers with the original manufacturer's label.

- Substances should not be mixed with one another unless recommended by the manufacturer.

- Operations should be observed as necessary to ensure proper use and disposal of materials on site.

- Whenever possible, all of a product should be used up before disposing of the container.

- Manufacturer's recommendations for proper use and disposal should be followed.

J. Management of Portable Sanitary Stations

To the extent practicable, portable sanitary stations should be located in an area that does not drain to any protected natural areas, Waters of the State, or storm water structures and should be anchored to the ground to prevent from tipping over. Portable sanitary stations located on impervious surfaces should be placed on top of a secondary containment device, or be surrounded by a control device (e.g., gravel-bag berm). The contractor should not create or allow unsanitary conditions. Sanitary waste should be disposed of in accordance with applicable State and/or Local regulations.

K. Spill Prevention and Clean-Up Procedures

Manufacturer's recommended methods for spill clean-up should be available and site personnel should be made aware of the procedures and the location of the information and clean-up supplies. Materials and equipment necessary for spill clean-up should be kept in the material storage area on site. Equipment and materials should include, but are not limited to, brooms, dust pans, mops, rags, gloves, goggles, kitty litter, sand, sawdust and plastic and/or metal trash containers specifically for this purpose. Discharges of a hazardous substance or oil caused by a spill (e.g., a spill of oil into a separate storm sewer or Waters of the State) are not authorized by the ILR10 permit. If a spill occurs, notify the Primary Contact immediately. The construction site should have the capacity to control, contain, and remove spills, if they occur. Spills should be cleaned up immediately (after discovery) in accordance with MSDS and should not be buried on site or washed into storm sewer drainage inlets, drainage-ways, or Waters of the State.

Spills in excess of Federal Reportable Quantities (as established under 40 CFR Parts 110, 117, or 302), should be reported to the National Response Center by calling (800) 424-8802. MSDS often include information on Federal Reportable Quantities for materials. Spills of toxic or hazardous materials should be reported to the appropriate State or Local government agency, as required. When cleaning up a spill, the area should be kept well ventilated and appropriate personal protective equipment should be used to minimize injury from contact with a hazardous substance.

In addition to the good housekeeping and other management practices discussed in the previous sections of these Notes, the following minimum practices should be followed to reduce the risk of spills:

- On-site vehicles should be monitored for leaks and should receive regular preventative maintenance to reduce the chance of leakage.

- Petroleum products should be stored in tightly sealed and clearly labeled containers.

- Contractors should follow the manufacturer's recommendations for proper use, storage, and disposal of materials. Excess materials should be disposed of according to the manufacturer's instructions or State and Local regulations, and should not be discharged to the storm sewer or waterbody.

L. De-Watering Operations

During de-watering/pumping operations, only uncontaminated water should be allowed to discharge to protected natural areas, Waters of the State, or to a storm sewer system (in accordance with Local permits). Inlet hoses should be placed in a stabilized sump pit or floated at the surface of the water in order to limit the amount of sediment intake. Pumping operations may be discharged to a stabilized area that consists of an energy dissipating device (e.g., stone), sediment filter bag, or both. Adequate erosion controls should be used during de-watering operations as necessary. Stabilized conveyance channels should be installed to direct water to the desired location as applicable. Additional control measures may be installed at the outlet area at the discretion of the Primary Contact or Engineer.

M. Off-Site Vehicle Tracking

The site should have one or more stabilized construction entrances in conformance with the Plan details. Stabilized construction entrance(s) should be installed to help reduce vehicle tracking of sediments. Streets should be swept as needed to reduce excess sediment, dirt, or stone tracked from the site. Maintenance may include top dressing the stabilized entrance with additional stone and removing top layers of stone and sediment, as needed. Vehicles hauling erodible material to and from the construction site should be covered with a tarp.

N. Topsoil Stockpile Management

If topsoil is to be stockpiled at the site, select a location so that it will not erode, block drainage, or interfere with work on site. Topsoil stockpiles should not be located in the 100-year floodplain or designated buffer protecting Waters of the State. During construction of the project, soil stockpiles should be stabilized or protected with sediment trappling measures. Perimeter controls, such as silt fence, should be placed around the stockpile immediately. Stabilization of the stockpile should be completed if the stockpile is to remain undisturbed for longer than fourteen days.

O. Dust Control

Dust control should be implemented on site as necessary. Repetitive treatment should be applied as needed to accomplish control when temporary dust control measures are used. A water truck should be present on site (or available) for sprinkling/irrigation to limit the amount of dust leaving the site. Watering should be applied daily (or more frequently) to be effective. Caution should be used not to overwater, as that may cause erosion.

If field observations indicate that additional protection from wind erosion (in addition to, or in place of watering) is necessary, alternative dust suppressant controls should be implemented at the discretion and approval of the Engineer and/or Primary Contact.

Street cleaning should also be used as necessary to control dust. Paved areas that have soil on them from the construction site should be cleaned as needed, utilizing a street sweeper or bucket-type endloader or scraper at the direction of the Engineer and/or Primary Contact.

3. MAINTENANCE

Maintenance of the controls incorporated into this project should be performed as needed to assure their continued effectiveness. This includes prompt and effective repair and/or replacement of deficient control measures. The following is a description of procedures that should be used to maintain, in good and effective operating condition, erosion and sediment control measures and other protective measures identified in the SESC Plan and Standard Specifications.

Dust control: When temporary dust control measures are used, repetitive treatment should be applied as needed to accomplish control.

Sediment filter bags: Sediment filter bags should be installed on pump outlet hoses that discharge off site or to sensitive on-site areas, and should be placed in an area that allows for the bag to be removed without producing a sediment discharge. The bags should be inspected frequently and repaired or replaced as needed.

Silt fence: Silt fences should be inspected regularly for undercutting where the fence meets the ground, overtopping, and tears along the length of the fence. Deficiencies should be repaired immediately. Remove accumulated sediments from the fence base when the sediment reaches one-half the fence height. During final stabilization, properly dispose of any sediment that has accumulated on the silt fence. Alternative sediment control measures should be considered for areas where silt fence continually fails.

Stabilized construction entrance: The stabilized construction entrances should be maintained to prevent tracking of sediment onto public streets. Maintenance includes top dressing with additional stone and removing top layers of stone and sediment. The sediment tracked onto the public right-of-way should be removed immediately.

Temporary sediment traps: Temporary sediment traps should be inspected after each period of significant rainfall. Remove sediment and restore the trap to its original dimensions when the sediment has accumulated to one-half the design depth of the permanent pool. Place the sediment that is removed in a designated disposal area. Check the structure for damage from erosion or piping. After all sediment-producing areas have been permanently stabilized, remove the structure and all unstable sediment. Grade the area to blend with the adjoining areas and stabilize properly.

4. INSPECTIONS

The Permittee (or their authorized representative) will be responsible for conducting site inspections in compliance with the ILR10 NPDES Permit. After each inspection, a report should be prepared by the qualified personnel who performed the inspection. The inspection report should be maintained on site as part of the SWPPP.

Inspections should be conducted at least once every seven calendar days and within 24 hours or by the end of the following work day, of the end of a storm event that is 0.5 inches or greater, or equivalent snowfall.

Inspections may be reduced to once per month when construction activities have ceased due to frozen conditions. Weekly inspections will recommence when construction activities are conducted, or if there is 0.5" or greater rain event, or a discharge due to snowmelt occurs.

Each inspection should include the following components:

A. Disturbed areas and areas used for the storage of materials that are exposed to precipitation should be inspected for evidence of, or the potential for, pollutants entering the drainage system. The erosion and sediment control measures identified in the SWPPP should be observed to ensure that they have been installed and are operating correctly. Where discharge points are accessible, they should be inspected to ascertain whether erosion control measures are effective in preventing slgnificant impacts to the receiving waters. Locations where vehicles enter or exit the site should be inspected for off-site sediment tracking. All pumping operations and other potential non-storm water discharge sources should also be inspected.

B. Based on the results of the Inspection, the description of potential pollutant sources identified, and the pollution prevention measures described in the SWPPP should be revised, as appropriate, as soon as practicable after the inspection. The modifications, if any, shall provide for timely implementation of any changes to the SWPPP within 7 calendar days following the Inspection.

C. A report summarizing the scope of the Inspection, name(s) and qualifications of personnel making the Inspection, the date(s) of the Inspection, major observations relating to the implementation of the SWPPP, and actions taken in accordance with paragraph B, above should be made and retained as part of the SWPPP for at least three years from the date that permit coverage expires or is terminated. The report shall be signed in accordance with Part VI.G. (Signatory Requirements) of the ILR10 NPDES Permit.

D. The Permittee shall notify the appropriate agency field operations section office by e-mail at: epa.swnoncompli@illinois.gov , telephone or fax within 24 hours of any incidence of noncompliance for any violation of the storm water pollution prevention plan observed during any Inspection conducted or for violation of any condition of this permit. The Permittee should complete and submit within 5 days an "Incidence of Non-Compliance" (ION) report for any violation of the SWPPP observed during an inspection conducted. Including those not required by the SWPPP. Submission should be on forms provided by IEPA and include specific Information on the cause of non-compliance, actions which were taken to prevent any further causes of non-compliance, and a statement detailing any environmental impact, which may have resulted from the non-compliance.

E. All reports of non-compliance shall be signed by a responsible authority as defined in Part VI.G. (Signatory Requirements), of the ILR10 NPDES Permit,

F. After the initial contact has been made within the appropriate agency field operations section office, all reports of non-compliance shall be mailed to IEPA at the following address:

Illinois Environmental Protection Agency
Division of Water Pollution Control
Compliance Assurance Section
1021 North Grand Avenue East
Post Office Box 19276
Springfield, Illinois 62794-9276

5. NON-STORM WATER DISCHARGES

Except for flows from fire fighting activities, possible sources of non-storm water that may be combined with storm water discharges associated with the proposed activity, are described below:

- Fire fighting activities
- Fire hydrant flushings
- Water used to wash vehicles where detergents are not used
- Water used to control dust
- Potable water sources including uncontaminated waterline flushings
- Landscape irrigation drainages
- Routine external building washdown which does not use detergents
- Pavement wash waters where spills or leaks of toxic or hazardous materials have not occurred (unless spilled materials have been removed) and where detergents have not been used.
- Uncontaminated air conditioning condensate
- Springs
- Irrigation ditches
- Uncontaminated ground water
- Foundation or footing drains where flows are not contaminated with process materials such as solvents

6. PROHIBITED NON-STORMWATER DISCHARGES

- Concrete and wastewater from washout of concrete (unless managed by an appropriate control)
- Drywall compound
- Wastewater from washout and cleanout of stucco, paint
- Form release oils
- Curing compounds and other construction materials
- Fuels, oils, or other pollutants used in vehicle or equipment operation and maintenance
- Soaps, solvents, or detergents
- Toxic or hazardous substances from a spill or other release
- Any other pollutant that could cause or tend to cause water pollution

Pollution prevention measures should be implemented for non-storm water components of the discharge.

STABILIZATION TYPE	JAN.	FEB.	MAR.	APR.	MAY	JUNE	JULY	AUG.	SEPT.	OCT.	NOV.	DEC.
PERMANENT SEEDING			A									
DORMANT SEEDING	B										B	
TEMPORARY SEEDING			C				D					
SODDING			E**									
MULCHING	F											

A KENTUCKY BLUEGRASS 90 LBS/ACRE MIXED WITH PERENNIAL RYEGRASS 30 LBS/ACRE.
B KENTUCKY BLUEGRASS 135 LBS/ACRE MIXED WITH PERENNIAL RYEGRASS 45 LBS/ACRE + STRAW MULCH 2 TONS/ACRE.
C SPRING OATS 100 LBS/ACRE
D WHEAT OR CEREAL RYE 150 LBS/ACRE.
E SOD
F STRAW MULCH 2 TONS/ACRE.

* IRRIGATION NEEDED DURING JUNE AND JULY.
** IRRIGATION NEEDED FOR 2 TO 3 WEEKS AFTER APPLYING SOD.

SOIL PROTECTION CHART

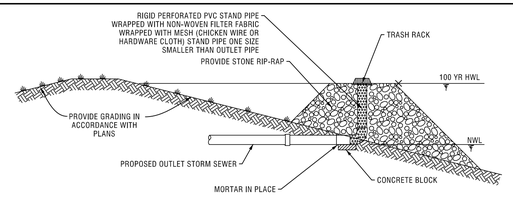

PLAN CODE: (PR)

PERFORATED RISER DETAIL
NOT TO SCALE

1. THE PERFORATED RISER SHALL BE PROVIDED AS PART OF THE SEDIMENT AND EROSION CONTROL MEASURES DURING CONSTRUCTION AND IN CONJUCTION WITH THE CONSTRUCTION OF THE DETENTION BASIN.
2. WHEN THE DETENTION BASIN AND UPSTREAM TRIBUTARY DRAINAGE AREAS ARE REVEGETATED, AND WHEN DIRECTED BY THE ENGINEER, THE PERFORATED RISER SHALL BE REMOVED AND THE BASIN OUTFALL STRUCTURES SHALL BE CONSTRUCTED AND THE GRADING RESTORED IN ACCORDANCE WITH THE PLANS.

1. Set posts and excavate or slit—trench a 6—inch deep trench upslope along the line of the post

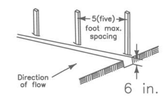

2. Attach the geotextile filter fabric to each post with a minimum of 3 (three) fasteners per post and extend to the bottom of the trench. Acceptable fasteners include staples, zip ties, or wire ties

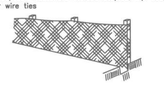

3. Backfill and compact the excavated spoil materials

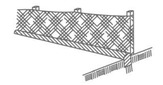

Geotextile Requirement	Test Method	MARV
Grab strength - Machine direction - X-machine direction	ASTM D 4632	 550 N 450 N
Permittivity	ASTM D 4491	0.05 sec-1
Apparent opening size*	ASTM D 4751	0.60 mm
Ultraviolet stability (retained strength)	ASTM D 4355	70% after 500 hours

Note:
Value for apparent opening size represents maximum average roll value.

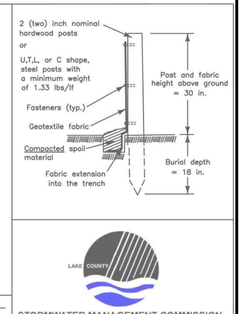

SILT FENCE DETAIL

DATE: 4/21/08 BY: KAW
REVISED: BY:

LAKE COUNTY STORMWATER MANAGEMENT COMMISSION

OUTFALL NAME OR NUMBER	INLET PIPE SIZE d (IN)	LENGTH OF APRON L (FT)	RIPRAP GRADATION	WIDTH OF APRON U/S FACE 3d (FT)	WIDTH OF APRON D/S FACE 3d+L (FT)	DEPTH OF RIPRAP Y (IN)

NO. | DATE | REMARKS

NO. | DATE | REMARKS

NO. | DATE | REMARKS

SOIL EROSION & SEDIMENT CONTROL PLAN - 9

BRIDGE POINT O'HARE NORTH
DEERFIELD, IL

CONSULTING ENGINEERS
SITE DEVELOPMENT ENGINEERS
LAND SURVEYORS
9575 W. Higgins Road, Suite 700,
Rosemont, Illinois 60018
Phone: (847) 696-4060 Fax: (847) 696-4065

SPACECO INC.

FILENAME: 12271SE09

DATE: 03/24/23

JOB NO. 12271

SHEET
C10.9
55 OF 63

N:\Projects 2022\12271\ENG\12271SE09.dgn Default User=shermanas

AUTOCAD2006

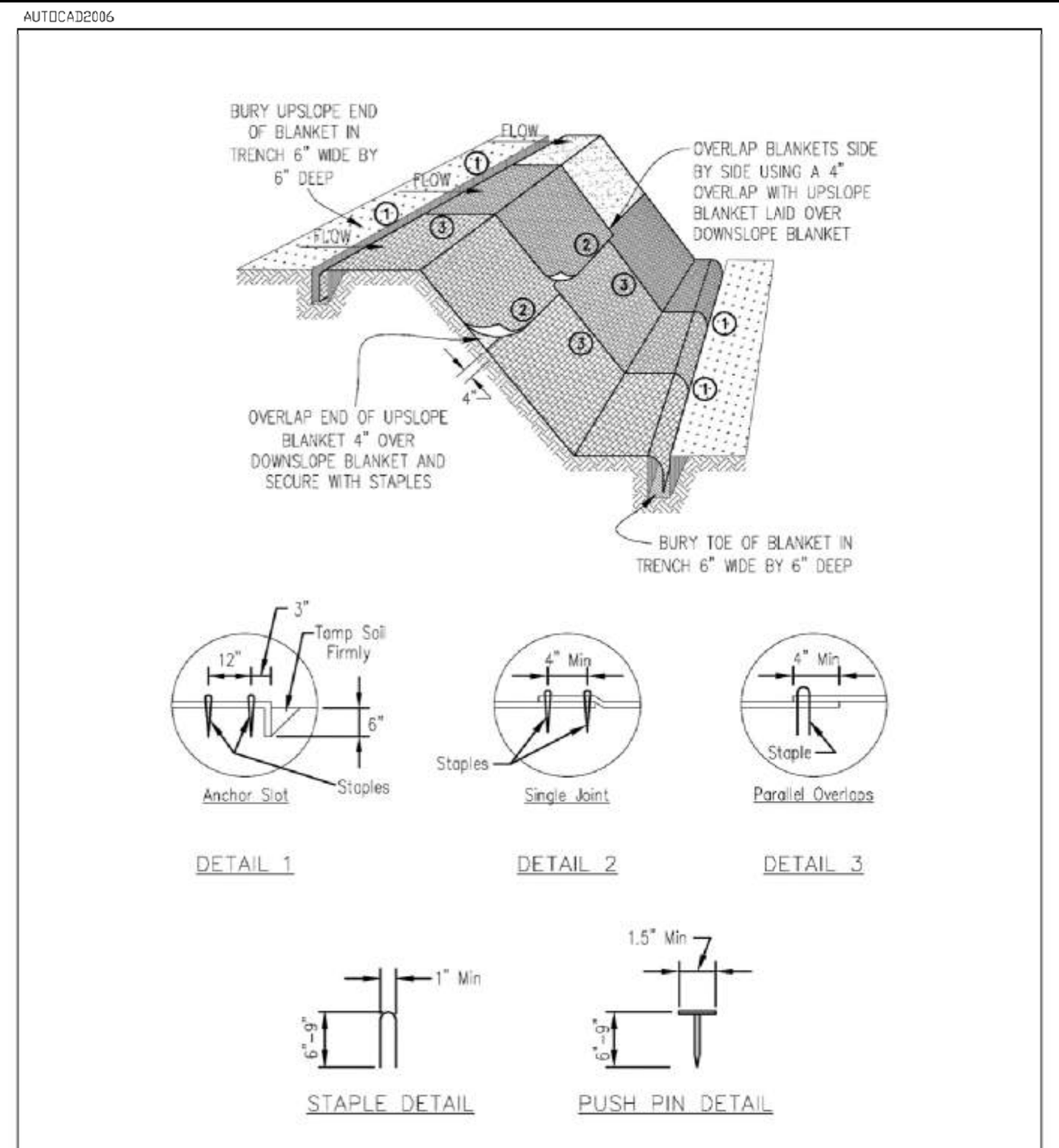

NOTES:

1. Staples shall be placed in a diamond pattern at 2 per s.y. for stiched blankets. Non-stiched shall use 4 staples per s.y. of material. This equates to 200 staples with stiched blanket and 400 stapels with non-stiched blanket per 100 s.y. of material.
2. Staple or push pin lengths shall be selected based on soil type and conditions. (minimum staple length is 6")
3. Erosion control material shall be placed in contact with the soil over a prepared seedbed.
4. All anchor slots shall be stapled at approximately 12" intervals.

PLAN CODE: EB

EROSION CONTROL BLANKET INSTALLATION DETAILS

Drawn B. JOHNSON 11/08

INLET PROTECTION - EXCAVATED DRAIN PLAN

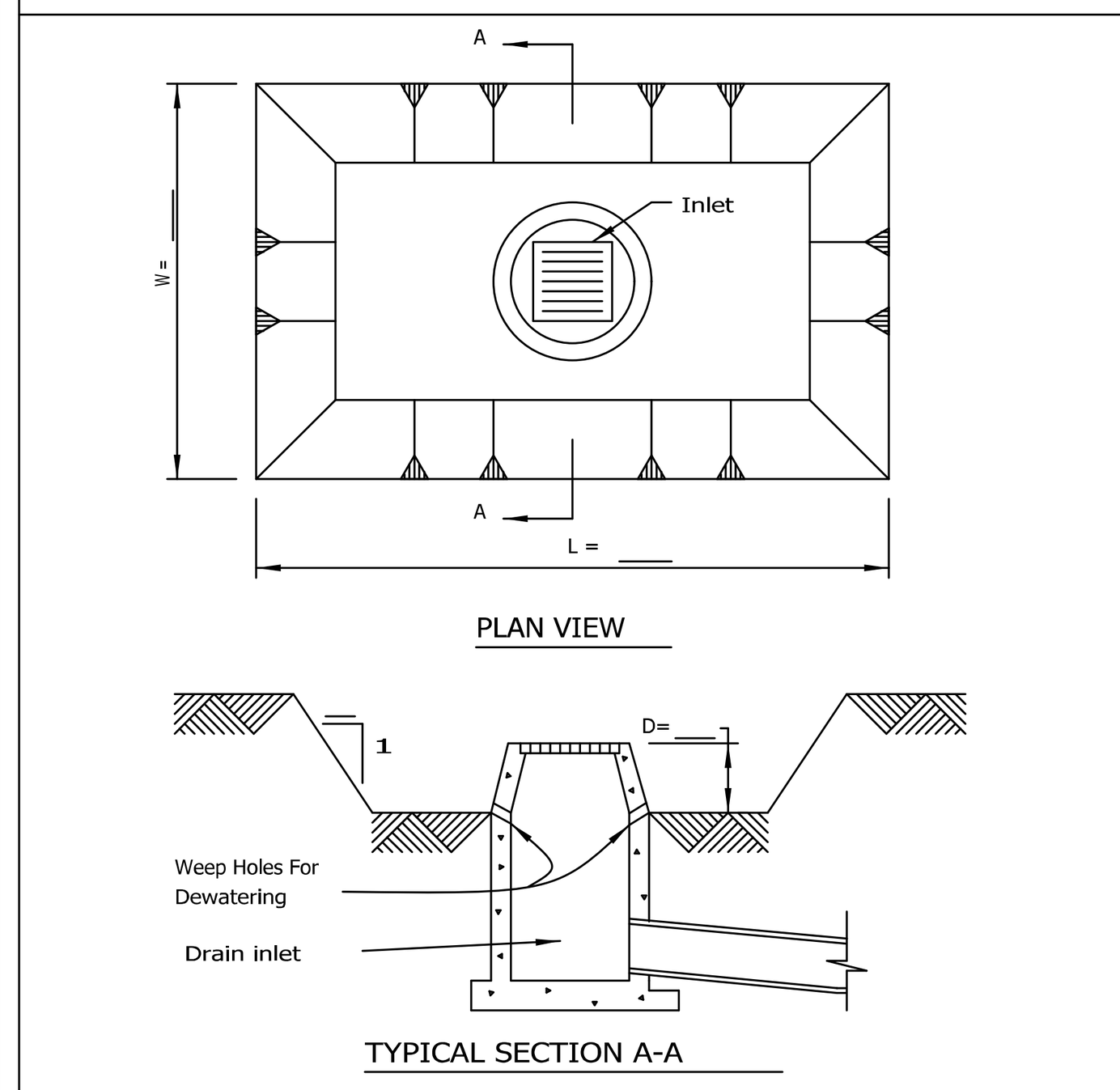

NOTES:
1. Sediment shall be removed and the trap restored to its original dimensions when the sediment has accumulated to 1/2 the design depth of the trap. Removed sediment shall be deposited in a suitable area and in such a manner that it will not erode.
2. The sediment trap shall be removed and the area stabilized when the constructed drainage area has been properly stabilized.
3. All cut slopes shall be 2:1 or flatter.

PLAN CODE: IP

REFERENCE	NRCS Natural Resources Conservation Service	STANDARD DWG. NO. IL-555 SHEET 1 OF 1 DATE 3-11-93

LEVEL SPREADER

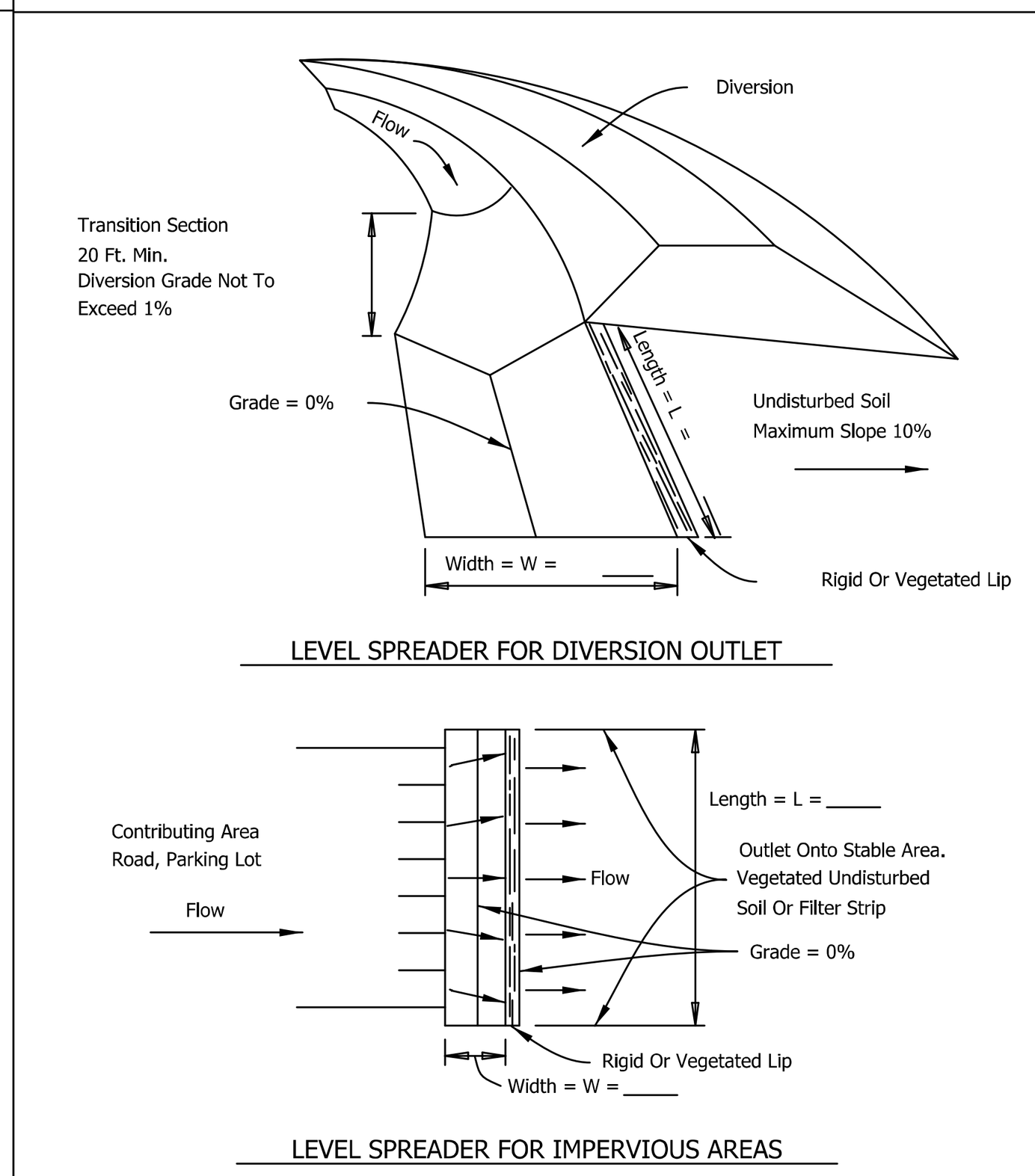

NOTES:
1. Ends of spreader shall be tied into higher ground to prevent flow around the level spreader.
2. See plans for L and W dimensions.

PLAN CODE: LS

REFERENCE	NRCS Natural Resources Conservation Service	STANDARD DWG. NO. IL-570 SHEET 1 OF 2 DATE 1-29-99

LEVEL SPREADER

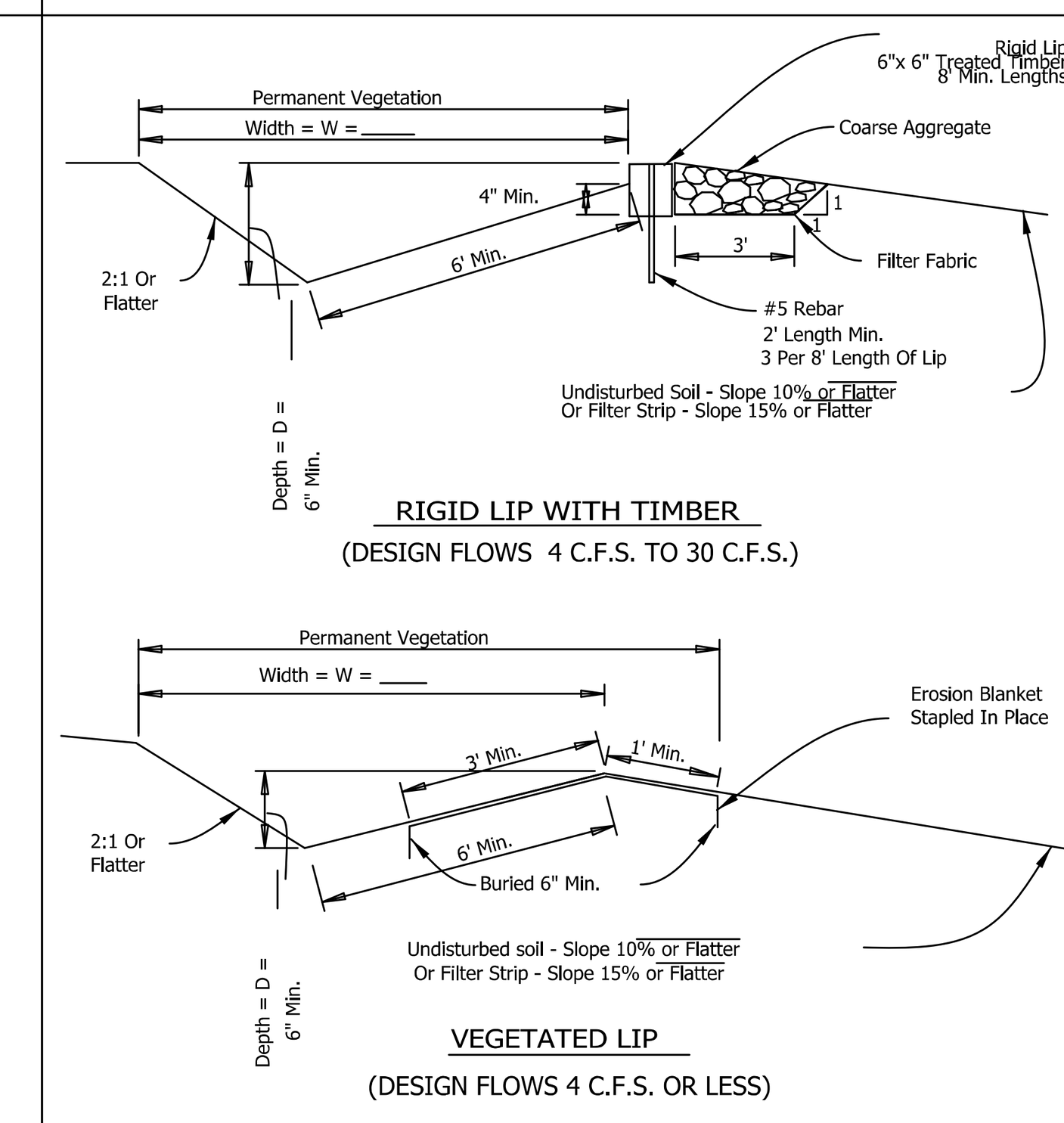

NOTES:
1. Coarse aggregate shall meet one of the following IDOT gradations: CA-1, or CA-3.
2. Filter fabric shall meet the requirements of material specification 592 GEOTEXTILE, Table 1 or 2, Class I, II, or IV.
3. See sheet FILTER STRIP-GRASSED IL-535 for filter strip requirements.
4. See sheet EROSION BLANKET IL-530 for blanket material and installation requirements.
5. See plans for permanent seeding requirements.
6. See plans for D and W dimensions.

PLAN CODE: LS

REFERENCE	NRCS Natural Resources Conservation Service	STANDARD DWG. NO. IL-570 SHEET 2 OF 2 DATE 1-29-99

RIGHT OF WAY DIVERSION PLAN

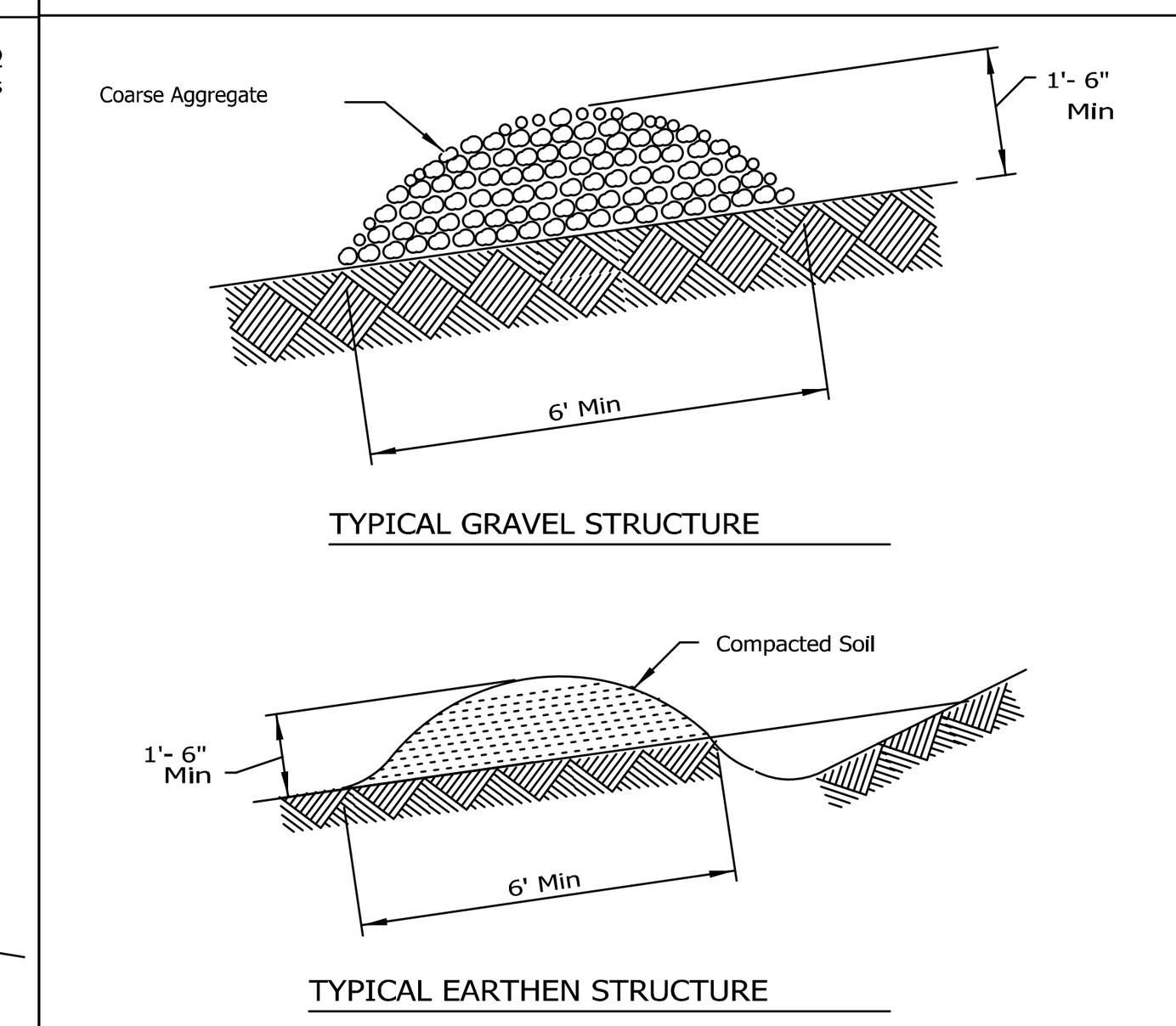

NOTES:
1. Install the diversion as soon as right-of-way has been cleared and graded.
2. Disc the base for the constructed ridge before placing fill.
3. Track the ridge to compact it to the design cross section.
4. Locate the outlet on an undisturbed area. Adjust field spacing of the diversion to use the most stable outlet areas. When natural areas are not deemed satisfactory, provide outlet protection.
5. Immediately seed and mulch the portions of the diversions not subject to construction traffic. Stablize with gravel areas to be crossed by vehicles.
6. Coarse aggregate, if used, shall meet one of the following IDOT gradations: CA-I,CA-2 CA-3, OR CA-4.

PLAN CODE: RD

REFERENCE	NRCS Natural Resources Conservation Service	STANDARD DWG. NO. IL-600 SHEET 1 OF 1 DATE 3-3-95

PIPE OUTLET TO FLAT AREA

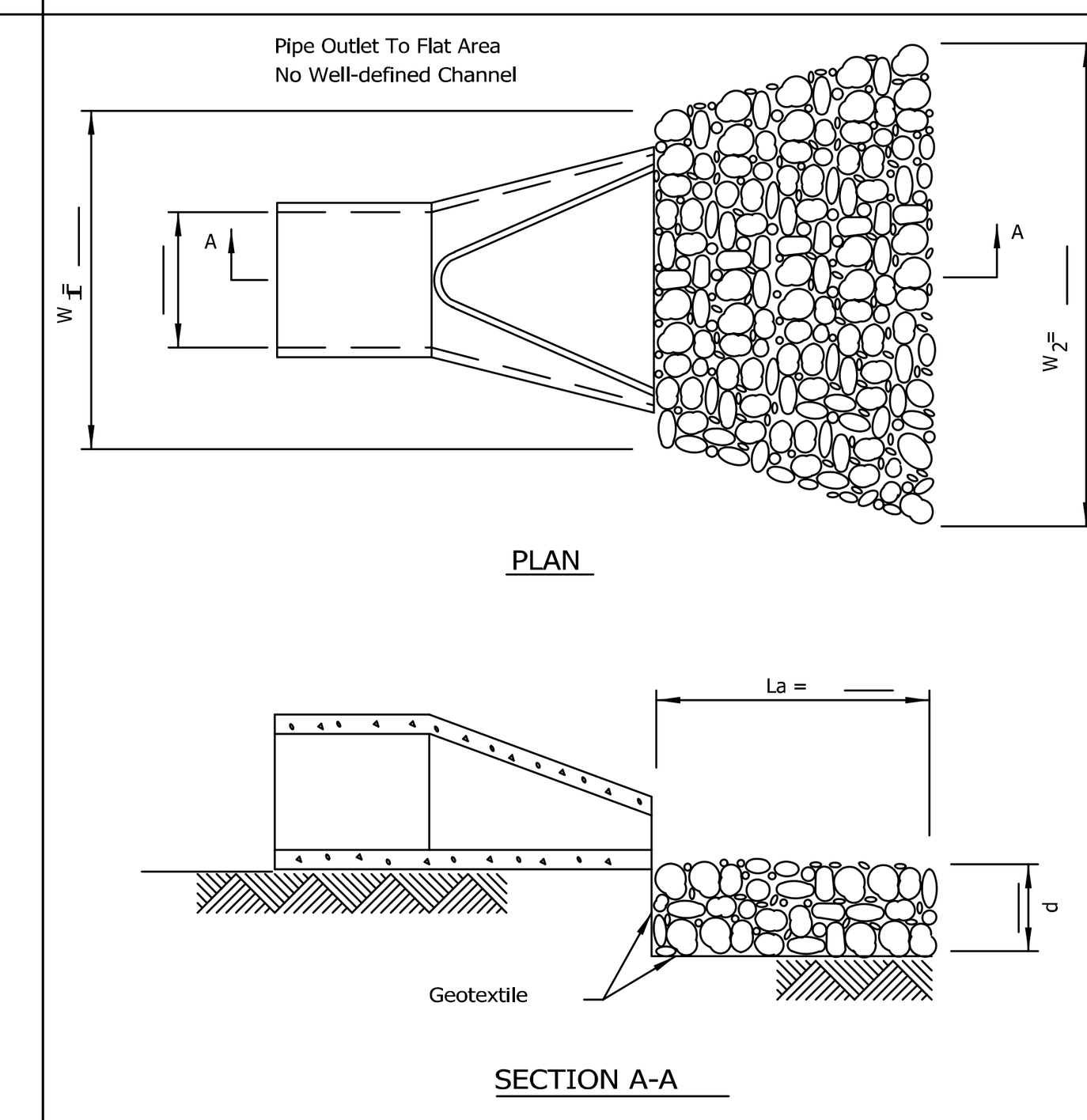

NOTES:
1. The filter fabric shall meet the requirements in material specifications 592 GEOTEXTILE Table 1 or 2, class , or . I II III
2. The rock riprap shall shall meet the IDOT requirements for the following gradation: RR ______, Quality______.
3. The riprap shall be placed according to construction specification 61 LOOSE ROCK RIPRAP. The rock may be equipment placed.

PLAN CODE: LA

REFERENCE	NRCS Natural Resources Conservation Service	STANDARD DWG. NO. IL-610 SHEET 1 OF 1 DATE 9-15-93

PIPE OUTLET TO CHANNEL

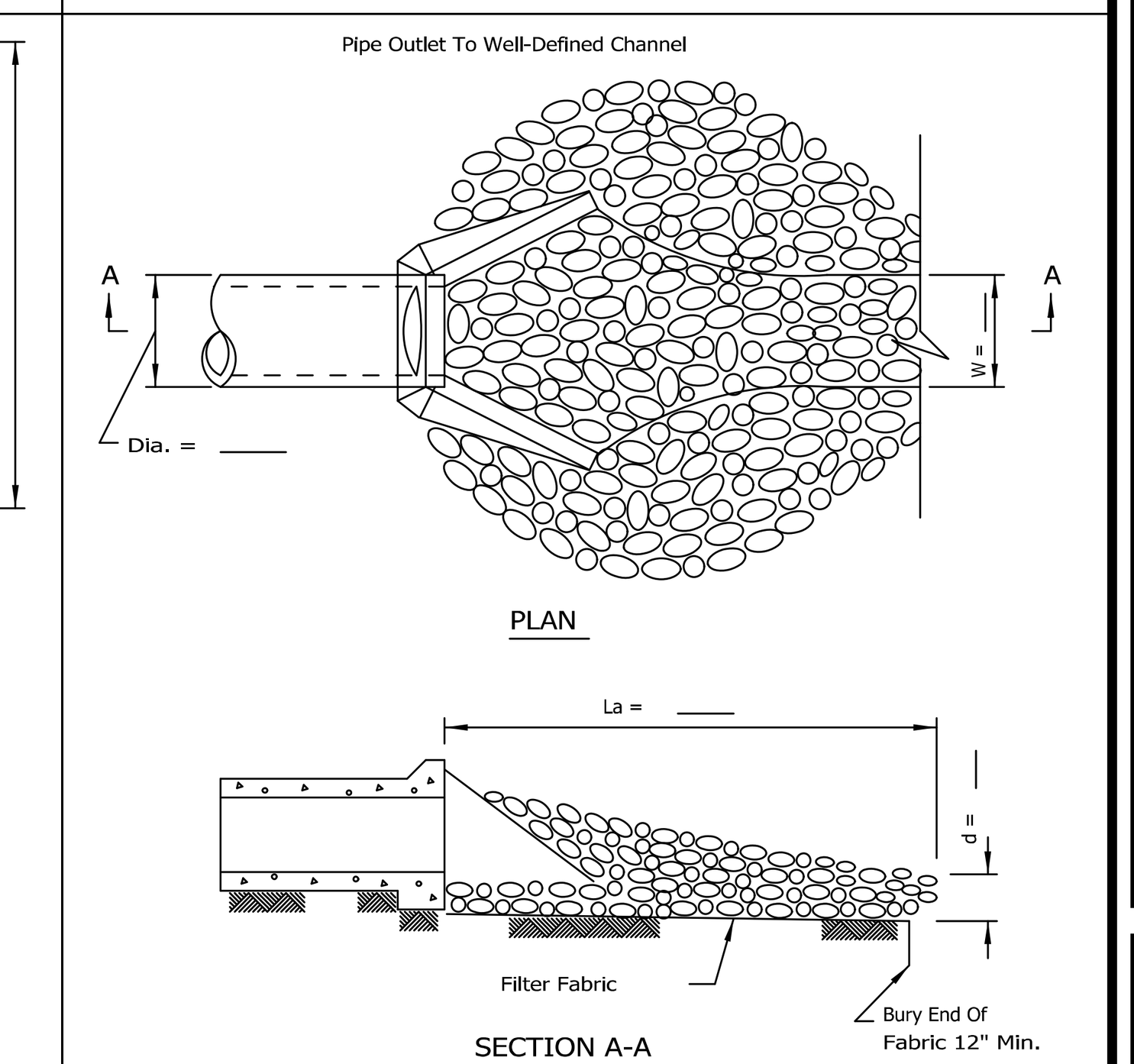

PLAN CODE: LA

NOTES:
1. The filter fabric shall meet the requirements in material specification 592 GEOTEXTILE Table 1 or 2, Class , or . I II III
2. The rock riprap shall meet the IDOT requirements for the following gradation______.
3. The riprap shall be placed according to construction specification 61 LOOSE ROCK RIPRAP. The rock may be equipment placed.

REFERENCE	NRCS Natural Resources Conservation Service	STANDARD DWG. NO. IL-611 SHEET 1 OF 1 DATE 8-18-94

STABILIZED CONSTRUCTION ENTRANCE PLAN

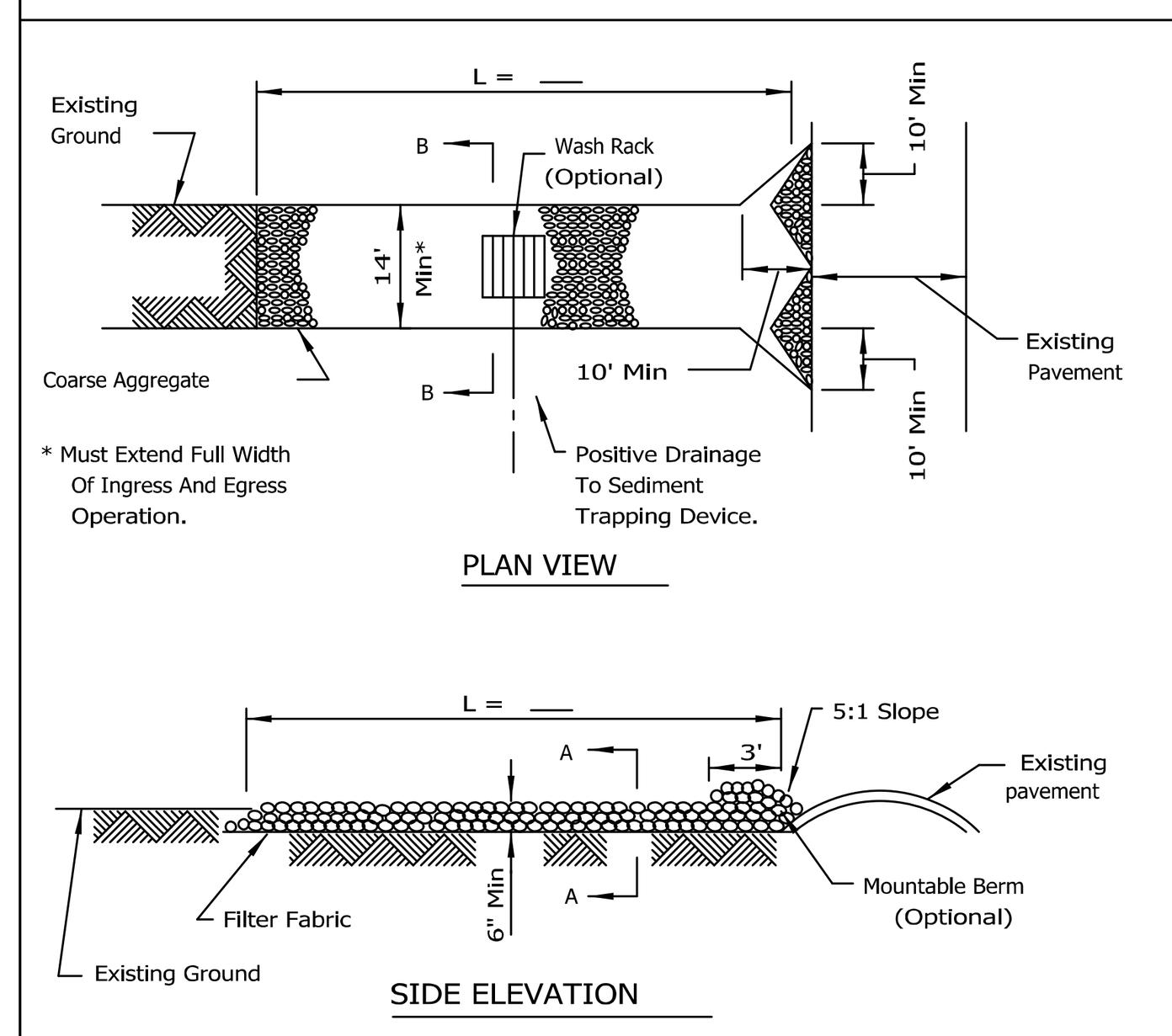

NOTES:
1. Filter fabric shall meet the requirements of material specification 592 GEOTEXTILE, Table I or 2, Class , or and shall be placed over the cleared area prior to the placing of rock.
2. Rock or reclaimed concrete shall meet one of the following IDOT coarse aggregate gradation, CA-1, CA-2, CA-3 or CA-4 and be placed according to construction specification 25 ROCKFILL using placement Method 1 and Class compaction.
3. Any drainage facilities required because of washing shall be constructed according to manufacturers specifications.
4. If wash racks are used they shall be installed according to the manufacturer's specifications.

PLAN CODE: SE

REFERENCE	NRCS Natural Resources Conservation Service	STANDARD DWG. NO. IL-630 SHEET 1 OF 2 DATE 8-18-94

STABILIZED CONSTRUCTION ENTRANCE PLAN

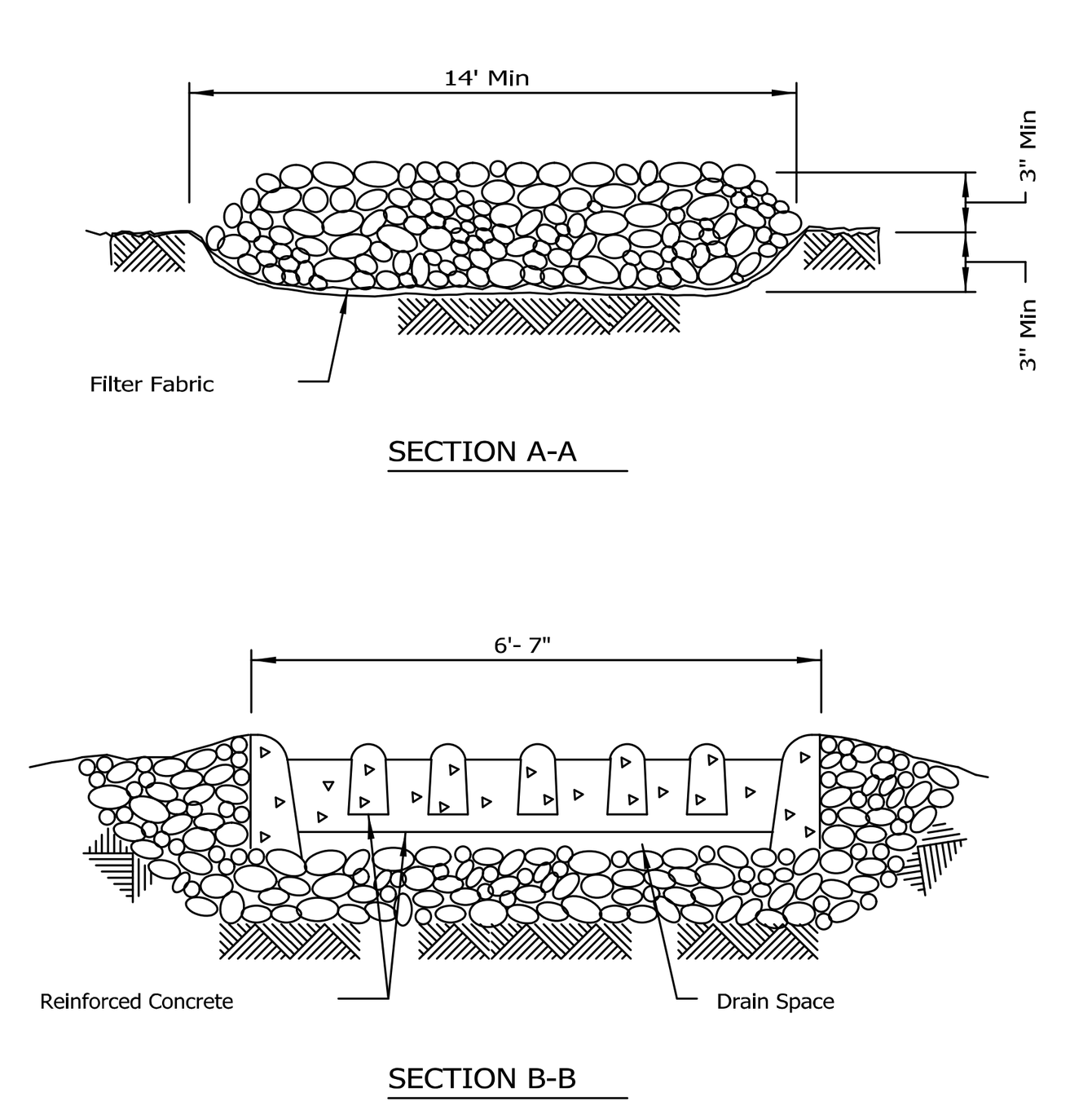

PLAN CODE: SE

REFERENCE	NRCS Natural Resources Conservation Service	STANDARD DWG. NO. IL-630 SHEET 2 OF 2 DATE 8-18-94

SUMP PIT PLAN

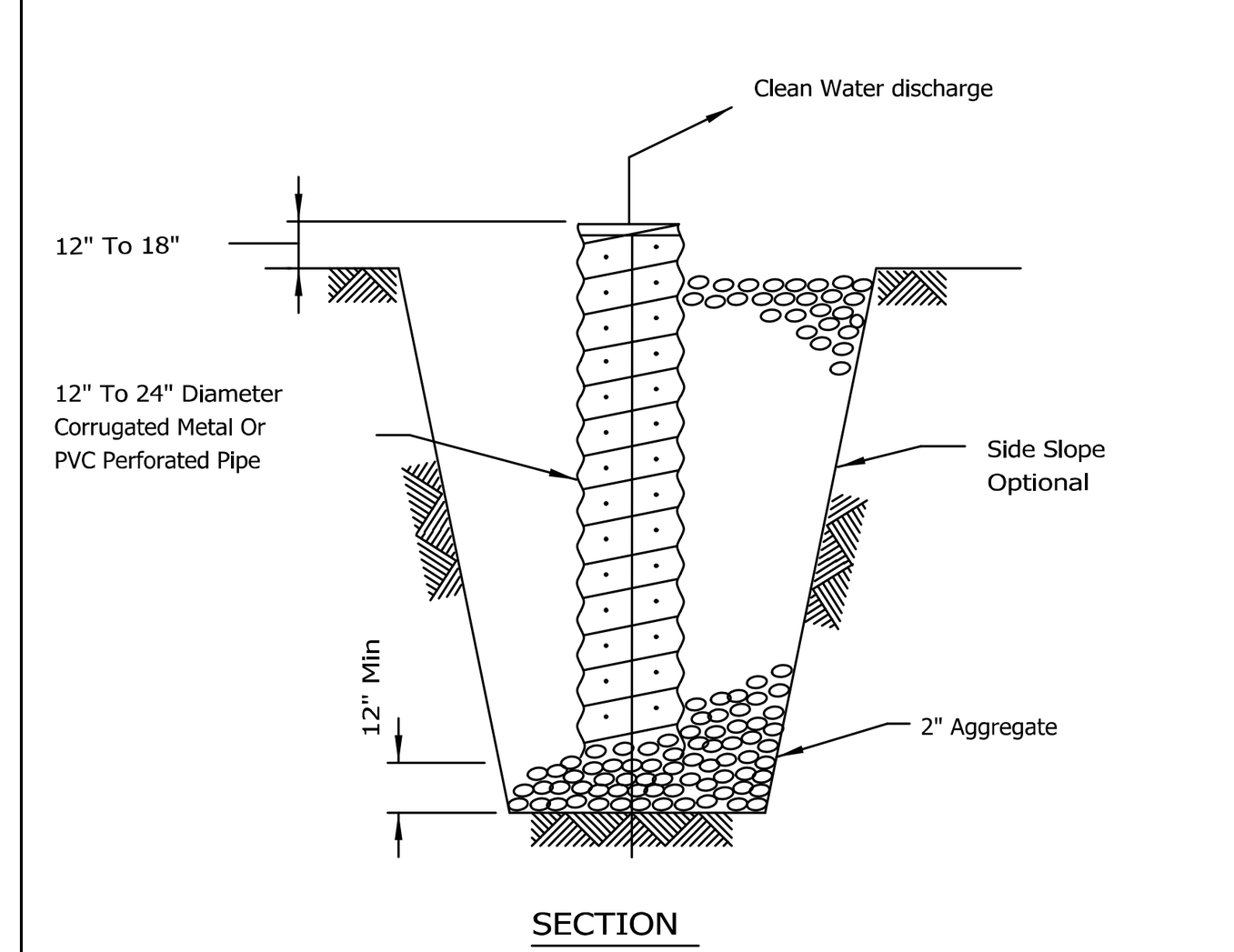

PLAN CODE: SP

NOTES:
1. Pit dimensions are optional.
2. The standpipe will be constructed by perforating a 12"-24" diameter corrugated metal or PVC pipe.
3. A base of 2" aggregate will be placed in the pit to a minimum depth of 12". After installing the standpipe, the pit surrounding the standpipe will then be backfilled with 2" aggregate.
4. The standpipe will extend 12" to 18" above the lip of the pit.
5. If discharge will be pumped directly to a storm drainage system, the standpipe will be wrapped with filter fabric before installation.
6. If desired, 1/4"-1/2" hardware cloth may be placed around the standpipe prior to attaching the filter fabric. This will increase the rate of water seepage into the pipe.

REFERENCE	NRCS Natural Resources Conservation Service	STANDARD DWG. NO. IL-650 SHEET 1 OF 1 DATE 8-11-94

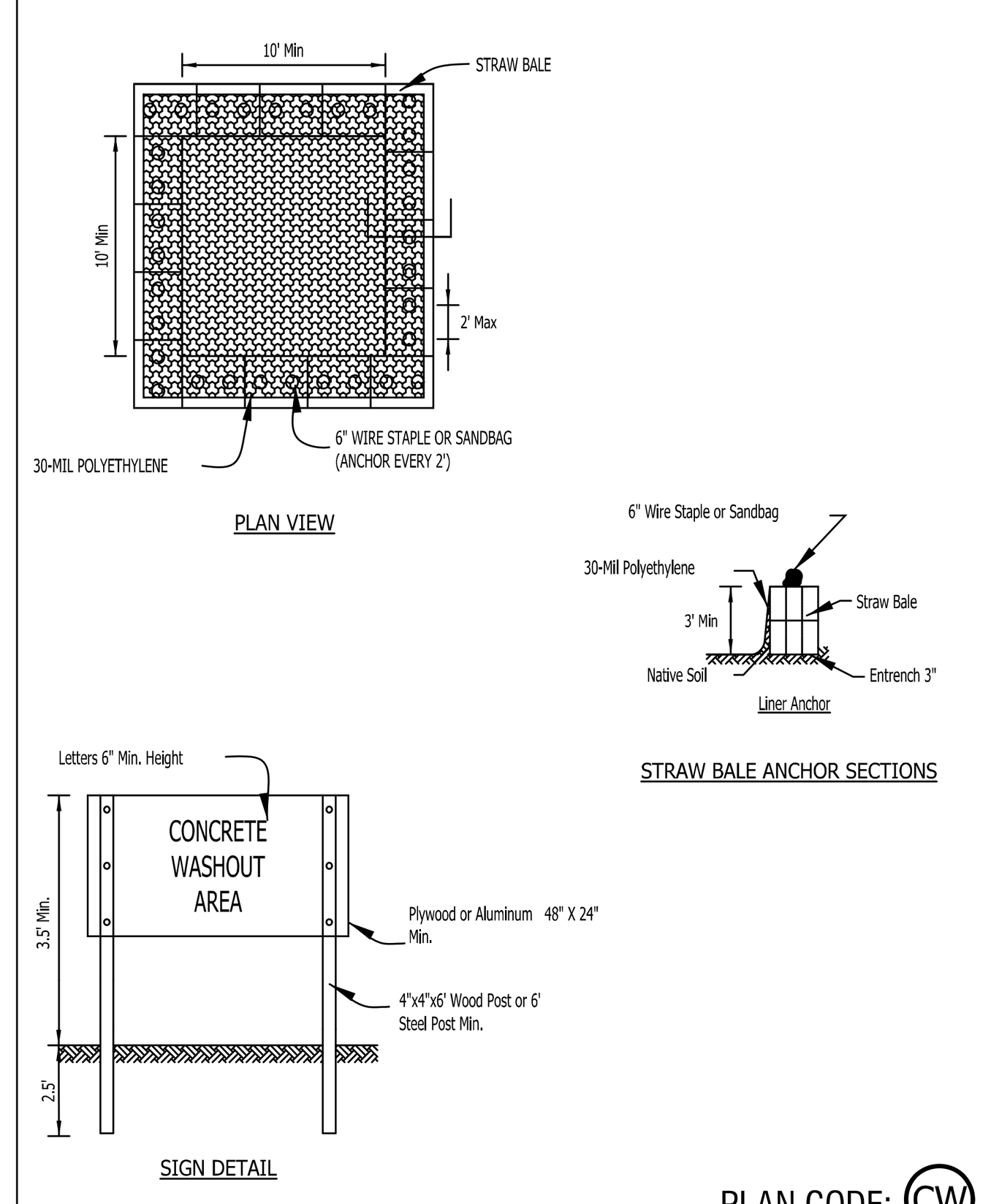

PLAN CODE: CW

NOTES:
1. Maintaining temporary concrete washout facilities shall include removing and disposing of hardend concrete and/or slurry and returning the facilities to a functional condition.
2. Facility shall be cleaned or reconstructed in a new area once washout becomes two-thirds full.
3. Each straw bale is to be staked in place using (2) 2"x2"x4' wooden stakes.

TEMPORARY CONCRETE WASHOUT FACILITY - STRAW BALE

Drawn B. JOHNSON 6/08

Catch-All - is a manufactured inlet filtration device designed to significantly reduce the ingress of pollutants into stormwater systems, and therefore, improve water quality. Designs are available for a custom fit in virtually any drainage structure casting.

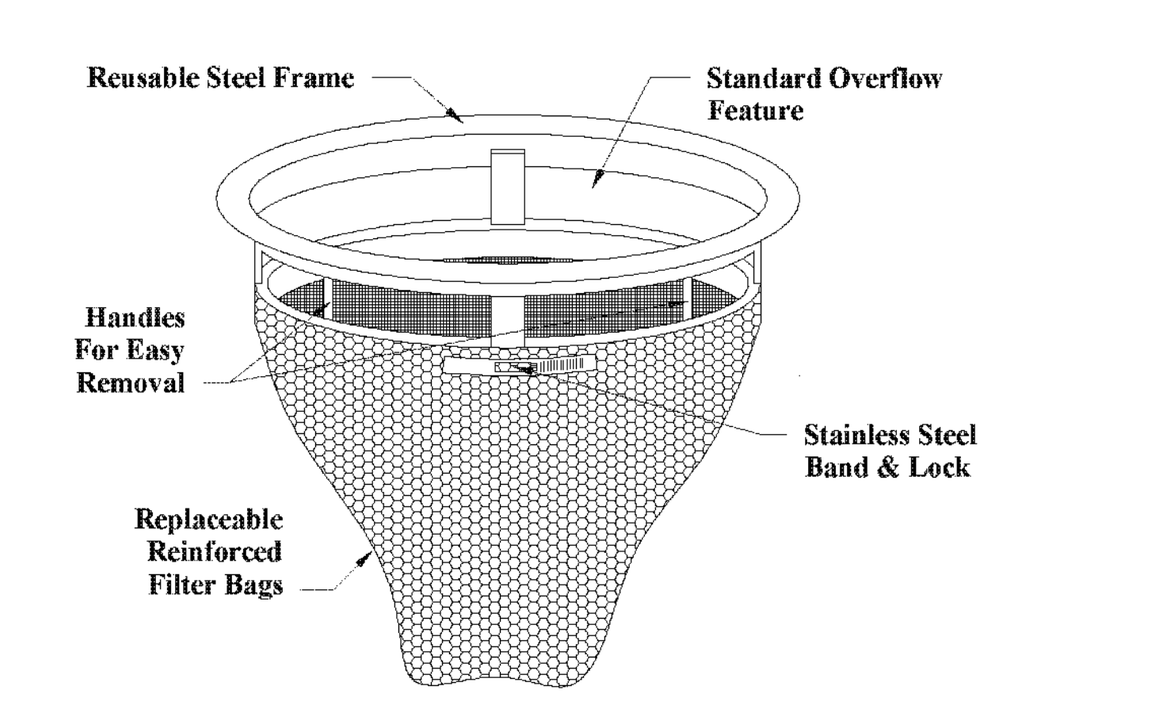

Catch-All HR is available to provide the added benefit of hydrocarbon removal.

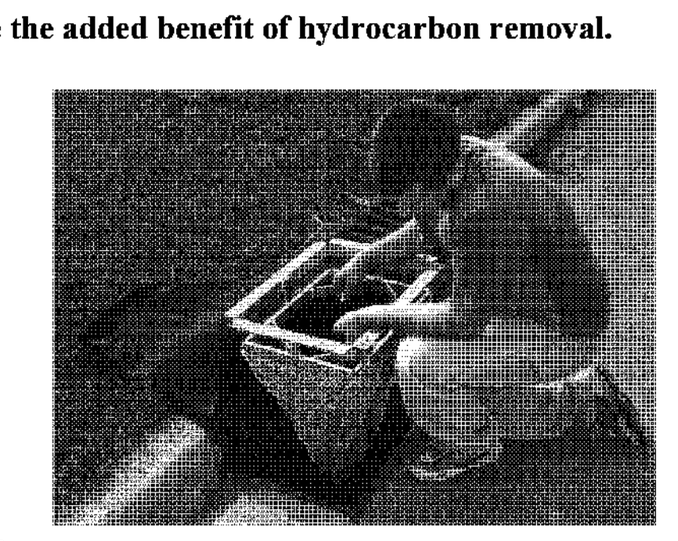

Design Benefits
1. Pollution Prevention
   - Sediment Control
2. Pollution Removal
   - Hydrocarbons (Catch-All HR)
   - Total Suspended Sediment
   - Phosphorus*
   - Nitrogen*
   - Heavy Metals*
   * *By virtue of sediment control*

Applications
1. Site Development & Highway Construction
   - Inlet Protection / Sediment Control
2. Permanent BMP
   - Maintenance Yards
   - Wash Bays
   - Parking Lots & Garages
   - Airports – Tarmac, Cab/Limo Stands, Rental Returns
   - Bank/Fast Food Drive-Ups
   - Reduce Maintenance of Underground Detention Systems
   - Reduce Maintenance of Underground Oil/Water Separators

PLAN CODE: FF

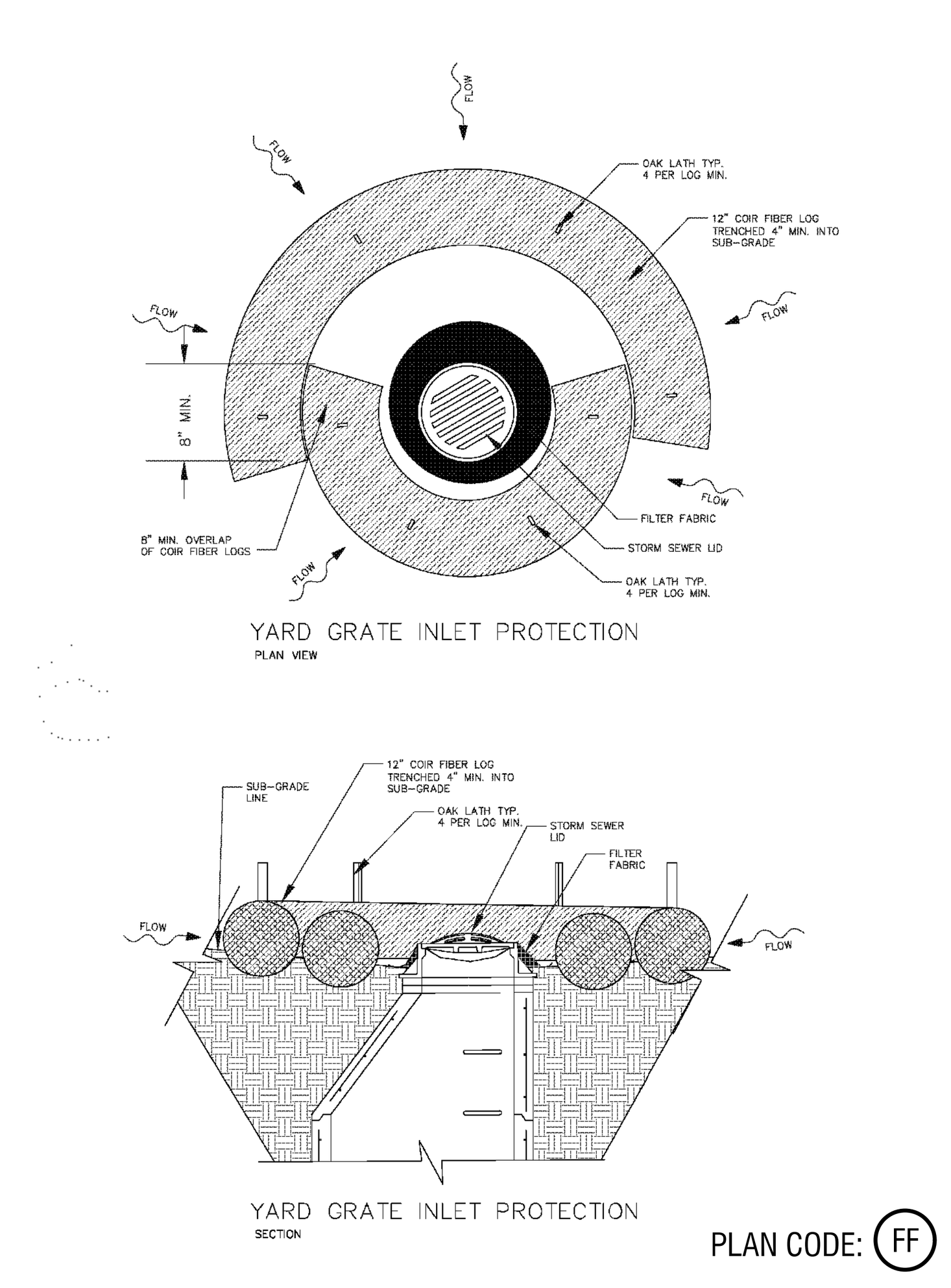

PLAN CODE: FF

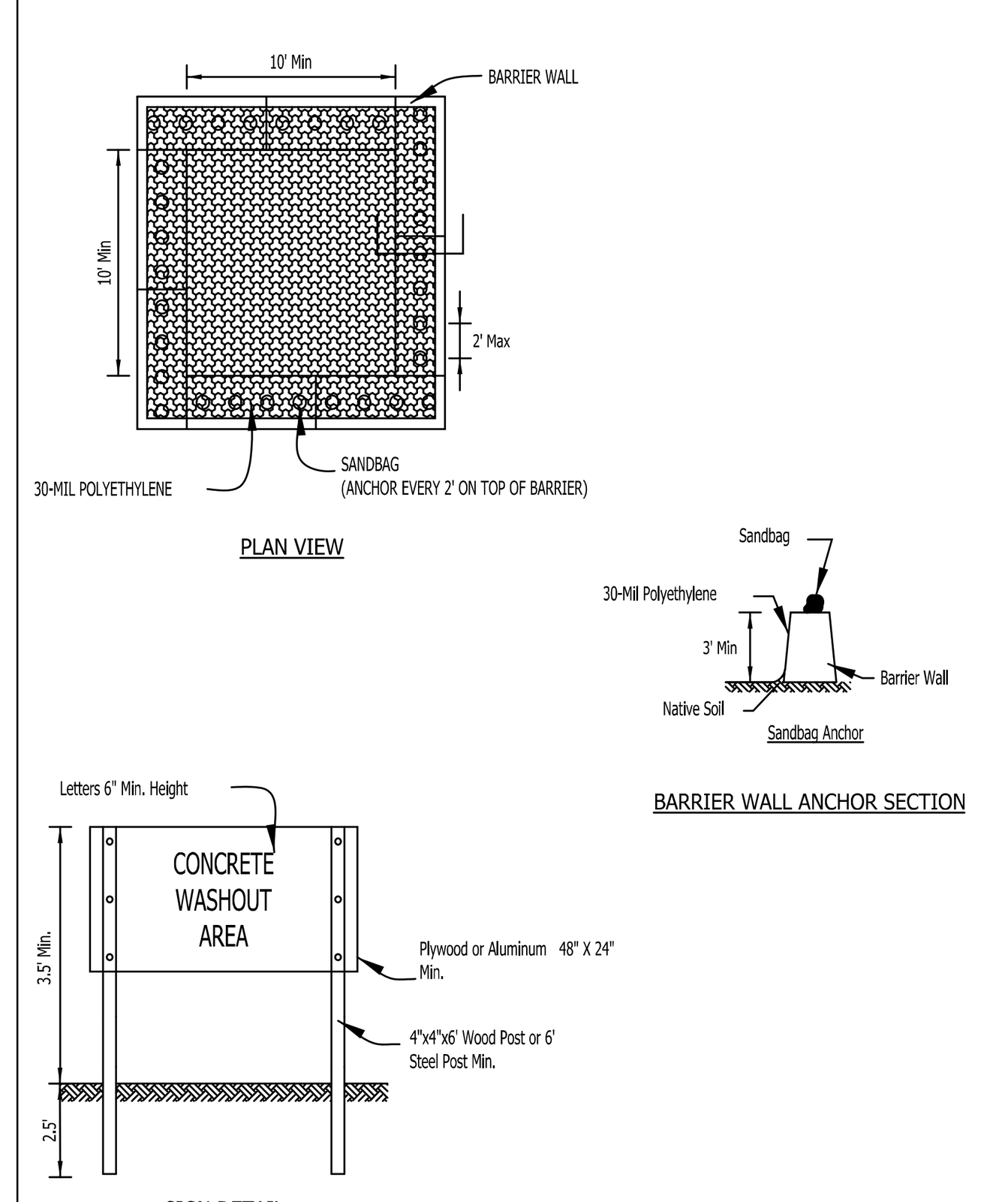

PLAN CODE: CW

NOTES:
1. Maintaining temporary concrete washout facilities shall include removing and disposing of hardend concrete and/or slurry and returning the facilities to a functional condition.
2. Facility shall be cleaned or reconstructed in a new area once washout becomes two-thirds full.

TEMPORARY CONCRETE WASHOUT FACILITY - BARRIER WALL

Drawn B. JOHNSON 6/08

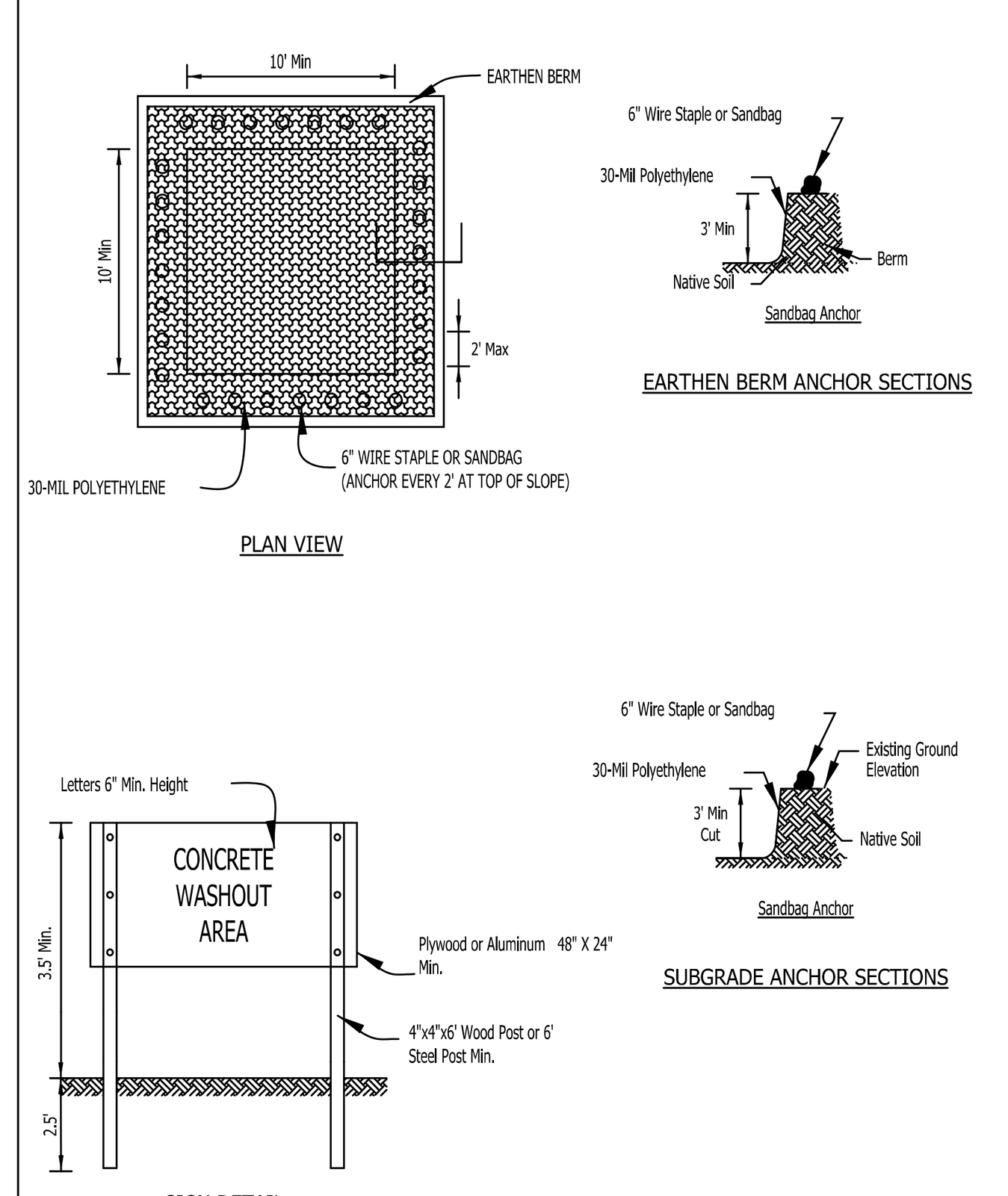

PLAN CODE: CW

NOTES:
1. Maintaining temporary concrete washout facilities shall include removing and disposing of hardend concrete and/or slurry and returning the facilities to a functional condition.
2. Facility shall be cleaned or reconstructed in a new area once washout becomes two-thirds full.

TEMPORARY CONCRETE WASHOUT FACILITY - EARTHEN TYPE

Drawn B. JOHNSON 6/08

LAKE COUNTY STORMWATER MANAGEMENT COMMISSION
SOIL EROSION AND SEDIMENT CONTROL CONSTRUCTION NOTES
(SMC – 2013 revision)

A. SEDIMENT CONTROL MEASURES SHALL BE INSTALLED PRIOR TO THE COMMENCEMENT OF HYDROLOGIC DISTURBANCE OF UPLAND AREAS.

B. FOR THOSE DEVELOPMENTS THAT REQUIRE A DESIGNATED EROSION CONTROL INSPECTOR (DECI), INSPECTIONS AND DOCUMENTATION SHALL BE PERFORMED, AT A MINIMUM:
   - UPON COMPLETION OF SEDIMENT AND RUNOFF CONTROL MEASURES (INCLUDING PERIMETER CONTROLS AND DIVERSIONS), PRIOR TO PROCEEDING WITH ANY OTHER EARTH DISTURBANCE OR GRADING.
   - AFTER EVERY SEVEN (7) CALENDAR DAYS OR STORM EVENT WITH GREATER THAN 0.5 INCH OF RAINFALL OR LIQUID EQUIVALENT PRECIPITATION.

C. SOIL DISTURBANCE SHALL BE CONDUCTED IN SUCH A MANNER AS TO MINIMIZE EROSION. IF STRIPPING, CLEARING, GRADING, OR LANDSCAPING ARE TO BE DONE IN PHASES, THE PERMITTEE SHALL PLAN FOR APPROPRIATE SOIL EROSION AND SEDIMENT CONTROL MEASURES.

D. A STABILIZED MAT OF CRUSHED STONE MEETING IDOT GRADATION CA-1 UNDERLAIN WITH FILTER FABRIC AND IN ACCORDANCE WITH THE ILLINOIS URBAN MANUAL, OR OTHER APPROPRIATE MEASURE(S) AS APPROVED BY THE ENFORCEMENT OFFICER, SHALL BE INSTALLED AT ANY POINT WHERE TRAFFIC WILL BE ENTERING OR LEAVING A CONSTRUCTION SITE. SEDIMENT OR SOIL REACHING AN IMPROVED PUBLIC RIGHT-OF-WAY, STREET, ALLEY OR PARKING AREA SHALL BE REMOVED BY SCRAPING OR STREET CLEANING AS ACCUMULATIONS WARRANT AND TRANSPORTED TO A CONTROLLED SEDIMENT DISPOSAL AREA.

E. TEMPORARY DIVERSIONS SHALL BE CONSTRUCTED AS NECESSARY TO DIRECT ALL RUNOFF FROM HYDROLOGICALLY DISTURBED AREAS TO AN APPROPRIATE SEDIMENT TRAP OR BASIN.

F. DISTURBED AREAS SHALL BE STABILIZED WITH TEMPORARY OR PERMANENT MEASURES WITHIN SEVEN (7) CALENDAR DAYS FOLLOWING THE END OF ACTIVE HYDROLOGIC DISTURBANCE OR REDISTURBANCE.

G. ALL STOCKPILES SHALL HAVE APPROPRIATE MEASURES TO PREVENT EROSION. STOCKPILES SHALL NOT BE PLACED IN FLOOD PRONE AREAS OR WETLANDS AND DESIGNATED BUFFERS.

H. SLOPES STEEPER THAN 3H:1V SHALL BE STABILIZED WITH APPROPRIATE MEASURESAS APPROVED BY THE ENFORCEMENT OFFICER.

I. APPROPRIATE EROSION CONTROL BLANKET SHALL BE INSTALLED ON ALL INTERIOR DETENTION BASIN SIDE SLOPES BETWEEN THE NORMAL WATER LEVEL AND HIGH WATER LEVEL.

J. STORM SEWERS THAT ARE OR WILL BE FUNCTIONING DURING CONSTRUCTION SHALL BE PROTECTED BY AN APPROPRIATE SEDIMENT CONTROL MEASURE.

K. IF DEWATERING SERVICES ARE USED, ADJOINING PROPERTIES AND DISCHARGE LOCATIONS SHALL BE PROTECTED FROM EROSION AND SEDIMENTATION. DISCHARGES SHALL BE ROUTED THROUGH AN APPROVED ANIONIC POLYMER DEWATERING SYSTEM OR A SIMILAR MEASURE AS APPROVED BY THE ENFORCEMENT OFFICER. DEWATERING SYSTEMS SHOULD BE INSPECTED DAILY DURING OPERATIONAL PERIODS. THE ENFORCEMENT OFFICER, OR APPROVED REPRESENTATIVE, MUST BE PRESENT AT THE COMMENCEMENT OF DEWATERING ACTIVITIES.

L. IF INSTALLED SOIL EROSION AND SEDIMENT CONTROL MEASURES DO NOT MINIMIZE SEDIMENT LEAVING THE DEVELOPMENT SITE, ADDITIONAL MEASURES SUCH AS ANIONIC POLYMERS OR FILTRATION SYSTEMS MAY BE REQUIRED BY THE ENFORCEMENT OFFICER.

M. ALL TEMPORARY AND PERMANENT EROSION CONTROL MEASURES MUST BE MAINTAINED AND REPAIRED AS NEEDED. THE PROPERTY OWNER SHALL BE ULTIMATELY RESPONSIBLE FOR MAINTENANCE AND REPAIR.

N. ALL TEMPORARY SEDIMENT CONTROL MEASURES SHALL BE REMOVED WITHIN 30 DAYS AFTER FINAL SITE STABILIZATION IS ACHIEVED OR AFTER THE TEMPORARY MEASURES ARE NO LONGER NEEDED.

O. THE EROSION CONTROL MEASURES INDICATED ON THE PLANS ARE THE MINIMUM REQUIREMENTS. ADDITIONAL MEASURES MAY BE REQUIRED, AS DIRECTED BY THE ENGINEER, ENFORCEMENT OFFICER, OR OTHER GOVERNING AGENCY.

LAKE COUNTY DIVISION OF TRANSPOTATION
SOIL EROSION AND SEDIMENT CONTROL GENERAL NOTES
(LCDOT – 2/4/15 revision)

A. AREAS OR EMBANKMENTS WITH 2:1 SLOPES OR STEEPER SHALL BE STABILIZED WITH SOD OR EROSION CONTROL BLANKET (SPECIAL) IN COMBINATION WITH SEEDING.

B. ANY SEDIMENT OR SOIL TRACKED OFF THE SITE SHALL BE REMOVED BY SCRAPING OR STREET SWEEPING AS ACCUMULATIONS WARRANT AND TRANSPORTED TO A CONTROLLED SEDIMENT DISPOSAL AREA. THIS WORK WILL NOT BE PAID FOR SEPARATELY BUT SHALL BE INCLUDED IN THE CONTRACT.

C. THE CONTRACTOR SHALL BE RESPONSIBLE FOR RETURNING ALL EXISTING AREAS (TO REMAIN) AFFECTED BY CONSTRUCTION ACTIVITIES, EQUIPMENT, OR LABORERS TO THE ORIGINAL UNDISTURBED CONDITIONS. THE CONTRACTOR SHALL ALSO BE RESPONSIBLE FOR PROTECTING ALL NEW WORK UNTIL THE COMPLETION OF THE CONTRACT.

D. PERIMETER EROSION BARRIER SHALL BE INSTALLED AT LOCATIONS SPECIFIED IN THE PLANS AT 1 FOOT OUTSIDE THE TOE OF SLOPE OR INSIDE THE RIGHT-OF-WAY WHICHEVER IS CLOSER TO THE CENTERLINE, OR AS DIRECTED BY THE ENGINEER PRIOR TO THE START OF ANY EARTHWORK, CULVERT, OR STORM SEWER CONSTRUCTION.

E. THE PERIMETER EROSION BARRIER SHALL REMAIN IN PLACE UNTIL ALL DISTURBED AREAS HAVE BEEN STABILIZED WITH VEGETATION. AT THIS TIME, THE PERIMETER EROSION BARRIER SHALL BE REMOVED AND AREAS DAMAGED BY THE PERIMETER EROSION BARRIER REMOVAL SHALL BE RESTORED. THE RESTORATION OF THE AREA DISTURBED BY THE PERIMETER EROSION BARRIER REMOVAL SHALL BE INCLUDED IN THE PAY ITEM OF PERIMETER EROSION BARRIER.

F. THE INSTALLATION & REMOVAL OF PERIMETER EROSION BARRIER SHALL BE PAID FOR UNDER THE ITEM OF PERIMETER EROSION BARRIER. MAINTENANCE OF PERIMETER EROSION BARRIER SHALL BE PAID FOR UNDER THE ITEM OF MAINTENANCE OF TEMPORARY EROSION CONTROL SYSTEMS.

G. TEMPORARY DITCH CHECKS SHALL BE CONSTRUCTED ACCORDING TO THE STANDARD DETAIL SHOWN ON THE PLANS OR AS DIRECTED BY THE ENGINEER. THE DITCH CHECKS SHALL BE INSTALLED AS GRADING PROGRESSES THROUGH THE PROJECT.

H. ALL SEEDED AREAS SHALL BE COVERED WITH EROSION CONTROL BLANKET.

SOIL EROSION AND SEDIMENT CONTROL PROJECT SPECIFIC NOTES

NO.	DATE	REMARKS

NO.	DATE	REMARKS

SOIL EROSION & SEDIMENT CONTROL PLAN-10

BRIDGE POINT O'HARE NORTH
DEERFIELD, IL

CONSULTING ENGINEERS
SITE DEVELOPMENT ENGINEERS
LAND SURVEYORS
9575 W. Higgins Road, Suite 700,
Rosemont, Illinois 60018
Phone: (847) 696-4060 Fax: (847) 696-4065
SPACECO INC.

FILENAME: 12271SE10

DATE: 03/24/23

JOB NO. 12271

SHEET **C10.10**

N:\Projects 2022\12271\ENG\12271SE10.dgn Default User=shermanas

EARTHWORK NOTES

1. GENERAL

A. IT IS THE CONTRACTOR'S RESPONSIBILITY TO UNDERSTAND THE SOIL AND GROUNDWATER CONDITIONS AT THE SITE. THE CONTRACTOR SHALL OBTAIN AND READ THE GEOTECHNICAL REPORTS AVAILABLE FROM THE OWNER.

B. ANY QUANTITIES IN THE BID PROPOSAL ARE INTENDED AS A GUIDE FOR THE CONTRACTOR'S USE IN DETERMINING THE SCOPE OF THE COMPLETED PROJECT. IT IS THE CONTRACTOR'S RESPONSIBILITY TO DETERMINE ALL MATERIAL QUANTITIES AND APPRAISE HIMSELF OF ALL SITE CONDITIONS. THE CONTRACT PRICE SUBMITTED BY THE CONTRACTOR SHALL BE CONSIDERED AS LUMP SUM FOR THE COMPLETE PROJECT. NO CLAIMS FOR EXTRA WORK WILL BE RECOGNIZED UNLESS ORDERED IN WRITING BY THE OWNER.

C. THE CONTRACTOR WILL NOTE THAT THE ELEVATIONS SHOWN ON THE CONSTRUCTION PLANS ARE FINISHED GRADE ELEVATIONS AND THAT PAVEMENT THICKNESS, TOPSOIL, ETC. MUST BE SUBTRACTED TO DETERMINE SUBGRADE ELEVATIONS.

D. THE CONTRACTOR SHALL MAINTAIN POSITIVE DRAINAGE DURING CONSTRUCTION, AND PREVENT STORMWATER FROM RUNNING INTO OR STANDING IN EXCAVATED AREAS. THE FAILURE TO PROVIDE PROPER DRAINAGE WILL NEGATE ANY POSSIBLE ADDED COMPENSATION REQUESTED DUE TO DELAYS OR UNSUITABLE MATERIALS CREATED AS A RESULT THEREOF. FINAL GRADES SHALL BE PROTECTED AGAINST DAMAGE FROM EROSION, SEDIMENTATION AND TRAFFIC.

E. PLANS FOR THE SITE DEWATERING, IF EMPLOYED, SHALL BE SUBMITTED TO AND APPROVED BY THE OWNER PRIOR TO IMPLEMENTATION. NO ADDITIONAL COMPENSATION SHALL BE MADE FOR DEWATERING DURING CONSTRUCTION.

F. THE CONTRACTOR SHALL BE RESPONSIBLE FOR IMPLEMENTATION OF THE "SOIL EROSION AND SEDIMENTATION CONTROL MEASURES". THE INITIAL ESTABLISHMENT OF EROSION CONTROL PROCEDURES AND THE PLACEMENT OF SILT AND FILTER FENCING, ETC. TO PROTECT ADJACENT PROPERTY, WETLANDS, ETC. SHALL OCCUR BEFORE GRADING BEGINS. A MUNICIPAL EROSION CONTROL INSPECTION MAY BE REQUIRED BEFORE ANY EARTHWORK IS PERFORMED.

G. PRIOR TO COMMENCEMENT OF GRADING ACTIVITIES, THE CONTRACTOR SHALL ERECT A "SNOW FENCE" AROUND ANY TREE DESIGNATED TO BE PRESERVED. SAID FENCE SHALL BE PLACED IN A CIRCLE CENTERED AROUND THE TREE, THE DIAMETER OF WHICH SHALL BE SUCH THAT THE ENTIRE DRIP ZONE (EXTENT OF FURTHEST EXTENDING BRANCHES) SHALL BE WITHIN THE FENCE LIMITS. THE EXISTING GRADE WITHIN THE FENCED AREA SHALL NOT BE DISTURBED.

H. EXCESS MATERIALS, IF NOT UTILIZED AS FILL, SHALL BE COMPLETELY REMOVED FROM THE CONSTRUCTION SITE AND DISPOSED OF OFF-SITE BY THE CONTRACTOR.

I. ALL EARTHWORK SHALL BE DONE UNDER THE SUPERVISION OF AN ILLINOIS LICENSED ENGINEER WHO SPECIALIZES IN THE GEOTECHNICAL FIELD (SOILS ENGINEER). THIS ENGINEER WILL BE RESPONSIBLE FOR ENSURING THAT ALL UNSUITABLE MATERIALS ARE REMOVED, ALL STRUCTURAL FILL MATERIALS ARE PROPERLY PLACED AND COMPACTED, ALL PAVEMENT SUBGRADES ARE PROPERLY PREPARED, PROOF ROLLING SUBGRADES AND BASE COURSES, AND ENSURING THAT ALL WATER RETAINING EMBANKMENTS ARE PROPERLY CONSTRUCTED. THE DEVELOPER PAYS FOR ALL GEOTECHNICAL SERVICES.

2. TOPSOIL EXCAVATION INCLUDES:

A. EXCAVATION OF TOPSOIL AND OTHER STRUCTURALLY UNSUITABLE MATERIALS WITHIN THOSE AREAS THAT WILL REQUIRE EARTH EXCAVATION OR COMPACTED EARTH FILL MATERIAL. EXISTING VEGETATION SHALL BE REMOVED PRIOR TO STRIPPING TOPSOIL OR FILLING AREAS.

B. PLACEMENT OF THE EXCAVATED MATERIAL IN OWNER DESIGNATED AREAS FOR FUTURE USE WITHIN AREAS TO BE LANDSCAPED, AND THOSE AREAS NOT REQUIRING STRUCTURAL FILL MATERIAL. PROVIDE NECESSARY EROSION CONTROL MEASURES FOR STOCKPILE.

C. TOPSOIL STOCKPILED FOR RESPREAD SHALL BE FREE OF CLAY AND SHALL NOT CONTAIN ANY OF THE TRANSITIONAL MATERIAL BETWEEN THE TOPSOIL AND CLAY. THE TRANSITIONAL MATERIAL SHALL BE USED IN NON-STRUCTURAL FILL AREAS OR DISPOSED OF OFF-SITE.

D. TOPSOIL RESPREAD SHALL INCLUDE HAULING AND SPEADING 6" OF TOPSOIL OVER AREAS TO BE LANDSCAPED WHERE SHOWN ON THE PLANS OR DIRECTED BY THE OWNER.

E. MODERATE COMPACTION IS REQUIRED IN NON-STRUCTURAL FILL AREAS.

3. EARTH EXCAVATION INCLUDES:

A. EXCAVATION OF CLAY AND OTHER MATERIALS WHICH ARE SUITABLE FOR USE AS STRUCTURAL FILL. THE EXCAVATION SHALL BE TO WITHIN A TOLERANCE OF 0.1 FEET OF THE PLAN SUBGRADE ELEVATIONS WHILE MAINTAINING PROPER DRAINAGE. THE TOLERANCE WITHIN PAVEMENT AREAS SHALL BE SUCH THAT THE EARTH MATERIALS SHALL "BALANCE" DURING THE FINE GRADING OPERATION.

B. PLACEMENT OF THE CLAY AND OTHER SUITABLE MATERIALS SHALL BE WITHIN THOSE AREAS REQUIRING STRUCTURAL FILL IN ORDER TO ACHIEVE THE PLAN SUBGRADE ELEVATIONS TO WITHIN A TOLERANCE OF 0.1 FEET. THE FILL MATERIAL SHALL BE PLACED IN LOOSE LIFTS THAT SHALL NOT EXCEED EIGHT (8) INCHES IN THICKNESS, AND THE WATER CONTENT SHALL BE ADJUSTED IN ORDER TO ACHIEVE REQUIRED COMPACTION.

STRUCTURAL FILL MATERIAL MAY BE PLACED WITHIN THOSE PORTIONS OF THE SITE NOT REQUIRING STRUCTURAL FILL, TO WITHIN SIX (6) INCHES OF THE PLAN FINISHED GRADE ELEVATION. IN AREAS REQUIRING STRUCTURAL FILL, HOWEVER, THIS MATERIAL SHALL NOT BE PLACED OVER TOPSOIL OR OTHER UNSUITABLE MATERIALS UNLESS SPECIFICALLY DIRECTED BY A SOILS ENGINEER WITH THE CONCURRENCE OF THE OWNER.

C. COMPACTION OF THE CLAY AND OTHER SUITABLE MATERIALS, SHALL BE TO AT LEAST 93% OF THE MODIFIED PROCTOR DRY DENSITY WITHIN PROPOSED PAVEMENT AREAS, SIDEWALK, ETC. COMPACTION SHALL BE AT LEAST 95% OF THE MODIFIED PROCTOR WITHIN PROPOSED BUILDING PAD AREAS.

D. EXCAVATION: QUANTITIES OF EARTH EXCAVATION INDICATED ELSEWHERE IN THIS CONTRACT HAVE BEEN COMPUTED BY THE END AREA METHOD AS PROVIDED FOR IN SECTION 202 OF THE STANDARD SPECIFICATIONS. EXCAVATED MATERIALS NOT NEEDED FOR THIS JOB SITE SHALL BE LEGALLY DISPOSED OF. PAYMENT SHALL BE MADE AT THE CONTRACT UNIT PRICE PER CUBIC YARD OF EARTH EXCAVATION.

4. UNSUITABLE MATERIAL

UNSUITABLE MATERIAL SHALL BE CONSIDERED AS MATERIAL WHICH IS NOT SUITABLE FOR THE SUPPORT OF PAVEMENT AND BUILDING CONSTRUCTION, AND IS ENCOUNTERED BELOW NORMAL TOPSOIL DEPTHS AND THE PROPOSED SUBGRADE ELEVATION, THE DECISION TO REMOVE SAID MATERIAL, AND TO WHAT EXTENT, SHALL BE MADE BY A SOILS ENGINEER WITH THE CONCURRENCE OF THE OWNER.

5. MISCELLANEOUS THE CONTRACTOR SHALL:

A. SPREAD AND COMPACT UNIFORMLY TO THE DEGREE SPECIFIED ALL EXCESS TRENCH SPOIL AFTER COMPLETION OF THE UNDERGROUND IMPROVEMENTS.

B. SCARIFY, DISC, AERATE, AND COMPACT, TO THE DEGREE SPECIFIED, THE UPPER TWELVE (12) INCHES OF THE SUITABLE SUBGRADE MATERIAL, IN ALL AREAS THAT MAY BE SOFT DUE TO EXCESS MOISTURE CONTENT. THIS APPLIES TO CUT AREAS AS WELL AS FILL AREAS.

C. PROVIDE WATER TO ADD TO DRY MATERIAL IN ORDER TO ADJUST THE MOISTURE CONTENT FOR THE PURPOSE OF ACHIEVING THE SPECIFIED COMPACTION.

D. BACKFILL THE CURB AND GUTTER AFTER ITS CONSTRUCTION AND PRIOR TO THE PLACEMENT OF THE BASE COURSE MATERIAL. THE CURBS SHALL NOT BE BACKFILLED UNTIL THE CONCRETE HAS CURED FOR AT LEAST 7 DAYS.

E. TRENCH COMPACTION: ALL TRENCHES SHALL BE COMPACTED BY MECHANICAL TECHNIQUES APPROVED BY THE SOILS ENGINEER UNTIL PROPER COMPACTION IS ACHIEVED. THE REQUIREMENT FOR MECHANICAL COMPACTION MAY BE WAIVED IF, IN THE OPINION OF THE SOILS ENGINEER AND THE MUNICIPAL ENGINEER, THE BACKFILLED TRENCHES MEET THE DENSITY REQUIREMENTS. JETTING OF TRENCHES FOR COMPACTION WILL NOT BE ALLOWED.

6. TESTING AND FINAL ACCEPTANCE

A. THE CONTRACTOR SHALL PROVIDE AS A MINIMUM, A FULLY LOADED SIX-WHEEL TANDEM AXLE TRUCK FOR PROOF ROLLING THE PAVEMENT SUBGRADE PRIOR TO THE PLACEMENT OF THE CURB AND GUTTER AND THE BASE MATERIAL. THIS SHALL BE WITNESSED BY MUNICIPAL ENGINEER AND THE OWNER. SEE PAVING SPECIFICATION.

B. ANY UNSUITABLE AREA ENCOUNTERED AS A RESULT OF PROOF ROLLING SHALL BE REMOVED AND REPLACED WITH SUITABLE MATERIAL, OR OTHERWISE CORRECTED, APPROVED BY THE SOILS CONSULTANT.

C. ANY TESTING THAT IS REQUIRED OF THIS CONSTRUCTION IS CONSIDERED INCIDENTAL TO THE COST OF CONSTRUCTION. NO SEPARATE PAYMENT WILL BE MADE.

SIGNING AND PAVEMENT MARKING

1. ALL SIGNING AND PAVEMENT MARKING SHALL BE IN ACCORDANCE WITH THE ILLINOIS MANUAL ON UNIFORM TRAFFIC CONTROL DEVICES (MUTCD), THE STANDARD SPECIFICATIONS FOR ROAD AND BRIDGE CONSTRUCTION (SSRBC), MUNICIPAL CODE AND THESE PLANS.

2. CONTRACTOR SHALL ESTABLISH LOCATION OF ALL SIGNS AND MARKINGS FOR APPROVAL BY THE OWNER PRIOR TO INSTALLATION.

3. SIGNS: SIGNS SHALL BE CONSTRUCTED OF 0.080 INCH THICK FLAT ALUMINUM PANELS WITH REFLECTORIZED LEGEND ON THE FACE IN ACCORDANCE WITH (SSRBC) SECTION 720. LEGEND SHALL BE IN ACCORDANCE WITH MUTCD AND AS SHOWN ON THE PLANS.

4. POSTS: SIGN POSTS SHALL BE A HEAVY DUTY STEEL "U" SHAPED CHANNEL WEIGHING 3.0 POUNDS/FOOT SUCH AS A TYPE B METAL POST PER (SSRBC) SECTION 729 [OR: 2" PERFORATED STEEL TUBE PER (SSRBC) SECTION 728].

5. SIGNS AND POSTS SHALL BE INSTALLED IN ACCORDANCE WITH THE ABOVE (SSRBC) SECTIONS AND IDOT STANDARD 729001 EXCEPT AS MODIFIED BY THE PLANS.

6. PAVEMENT MARKINGS: ALL PAVEMENT MARKINGS IN THE ROADWAY LIMITS, SUCH AS STOP LINES, CENTERLINES, CROSSWALKS AND DIRECTIONAL ARROWS SHALL BE REFLECTORIZED THERMOPLASTIC PER (SSRBC) SECTION 780, EXCEPT AS MODIFIED BY THE PLANS. [NOTE TO ENGINEER: IDOT PREFERS REFLECTORIZED PAINT ON CONCRETE PAVEMENT - CHECK WITH AGENCY WHO WILL MAINTAIN ROAD.]

7. PAVEMENT MARKINGS ON BIKE PATHS, PARKING LOT STALLS, AND SIMILAR "LOW WEAR" APPLICATION, SHALL BE PAINT IN ACCORDANCE TO (SSRBC) SECTION 780, EXCEPT AS MODIFIED BY THE PLANS. REFLECTIVE BEADS ARE NOT REQUIRED.

8. COLOR, WIDTH, STYLE, AND SIZE OF ALL MARKINGS SHALL BE IN ACCORDANCE WITH (MUTCD) EXCEPT AS MODIFIED BY THE PLANS.

9. THERMOPLASTIC MARKINGS SHALL BE INSTALLED WHEN THE PAVEMENT TEMPERATURE IS 55° F AND RISING. PAINT MARKINGS MAY BE INSTALLED WHEN THE AIR TEMPERATURE IS 50° F AND RISING.

PAVING NOTES

1. GENERAL

A. PAVING WORK INCLUDES FINAL SUBGRADE SHAPING, PREPARATION AND COMPACTION; PLACEMENT OF SUB-BASE OR BASE COURSE MATERIALS; BITUMINOUS BINDER AND/OR SURFACE COURSES; FORMING, FINISHING AND CURING CONCRETE PAVEMENT, CURBS AND WALKS; AND FINAL CLEAN-UP AND ALL RELATED WORK.

B. COMPACTION REQUIREMENTS: [REFERENCE ASTM D-1557 (MODIFIED PROCTOR)] SUB-GRADE = 93%; SUB-BASE = 93%; AGGREGATE BASE COURSE = 95%; BITUMINOUS COURSES = REFER TO SSRBC ARTICLE 406.07. THE SOILS ENGINEER IS RESPONSIBLE FOR ENSURING THAT MATERIALS ARE PROPERLY PLACED AND COMPACTED.

C. IT SHALL BE THE CONTRACTOR'S SOLE RESPONSIBILITY TO PROVIDE PROPER BARRICADING, WARNING DEVICES AND THE SAFE MANAGEMENT OF TRAFFIC WITHIN THE AREA OF CONSTRUCTION. ALL SUCH DEVICES AND THEIR INSTALLATION SHALL CONFORM TO THE ILLINOIS MANUAL OF UNIFORM TRAFFIC CONTROL DEVICES, LATEST EDITION AND IN ACCORDANCE WITH THE MUNICIPAL CODE.

2. SUB-GRADE PREPARATION

A. EARTHWORK FOR PROPOSED PAVEMENT SUBGRADE SHALL BE FINISHED TO WITHIN 0.1 FOOT, PLUS OR MINUS, OF PLAN ELEVATION. THE CONTRACTOR SHALL SATISFY HIMSELF THAT THE SUBGRADE HAS BEEN PROPERLY PREPARED AND THAT THE FINISH TOP SUBGRADE ELEVATION HAS BEEN GRADED WITHIN TOLERANCES ALLOWED IN THESE SPECIFICATIONS. UNLESS THE CONTRACTOR ADVISES THE OWNER AND ENGINEER IN WRITING PRIOR TO FINE GRADING FOR BASE COURSE CONSTRUCTION, IT IS UNDERSTOOD THAT HE HAS APPROVED AND ACCEPTS THE RESPONSIBILITY FOR THE SUBGRADE.

B. PRIOR TO THE PLACEMENT OF THE BASE COURSE, THE SUBGRADE MUST BE PROOF ROLLED AND INSPECTED FOR UNSUITABLE MATERIALS AND/OR EXCESSIVE MOVEMENT. THE SOILS ENGINEER SHALL CONDUCT AND THE VILLAGE SHALL WITNESS ALL PROOF ROLLS. IF UNSUITABLE SUBGRADE IS ENCOUNTERED, IT SHALL BE CORRECTED IN A MANNER APPROVED BY THE OWNER OR HIS REPRESENTATIVE. THIS MAY INCLUDE ONE OR MORE OF THE FOLLOWING METHODS:
1) SCARIFY DISC AND AERATE.
2) REMOVE AND REPLACE WITH STRUCTURAL CLAY FILL.
3) REMOVE AND REPLACE WITH GRANULAR MATERIAL.
4) USE OF GEOTEXTILE FABRIC.

MAXIMUM DEFLECTION ALLOWED IN ISOLATED AREAS MAY BE 1/4" TO 1/2" IF NO DEFLECTION OCCURS OVER THE MAJORITY OF THE AREA.

C. PRIOR TO THE CONSTRUCTION OF THE CURB AND GUTTER AND THE PLACEMENT OF THE BASE MATERIAL, THE PAVEMENT AREA SHALL BE FINE GRADED TO WITHIN 0.04 FEET (1/2") OF FINAL SUBGRADE ELEVATION, TO A POINT TWO (2) FEET BEYOND THE BACK OF CURB, SO AS TO ENSURE PROPER THICKNESS OF PAVEMENT COURSES. NO CLAIMS FOR EXCESS QUANTITY OF BASE MATERIALS DUE TO IMPROPER SUBGRADE PREPARATION WILL BE HONORED.

D. PRIOR TO PLACEMENT OF THE BASE COURSE, ALL SUBGRADES MUST BE APPROVED BY THE MUNICIPAL ENGINEER, SOILS ENGINEER AND/OR OWNER.

3. CONCRETE WORK

A. ALL EXTERIOR CONCRETE SHALL BE PORTLAND CEMENT CONCRETE CLASS SI OR PV PER (SSRBC) SECTION 1020.04 WITH AIR ENTRAINMENT OF NOT LESS THAN FIVE (5%) OR MORE THAN EIGHT (8%) PERCENT. CONCRETE SHALL BE A MINIMUM OF SIX (6) BAG MIX AND SHALL DEVELOP A MINIMUM OF 3,500 PSI COMPRESSIVE STRENGTH AT FOURTEEN (14) DAYS. ALL CONCRETE SHALL BE BROOM FINISHED PERPENDICULAR TO THE DIRECTION OF TRAVEL. THE ADDITION OF CALCIUM CHLORIDE AND THE SUBSTITUTION OF FLY ASH FOR PORTLAND CEMENT IS PROHIBITED. 1.50 lbs OF COLLATED, FILLIBRATED, POLYPROPYLENE OLEFIN FIBERS 0.50 TO 0.75 INCHES IN LENGTH SHALL BE ADDED TO EACH CUBIC YARD OF CONCRETE USED FOR SIDEWALKS. THE FIBERS SHALL BE AS MANUFACTURED UNDER THE NAME "FIBERMESH" OR EQUAL.

B. CONCRETE CURB AND/OR COMBINATION CURB AND GUTTER SHALL BE OF THE TYPE SHOWN ON THE PLANS. THE CONTRACTOR IS CAUTIONED TO REFER TO THE CONSTRUCTION STANDARDS AND THE PAVEMENT CROSS-SECTION TO DETERMINE THE GUTTER FLAG THICKNESS AND THE AGGREGATE BASE COURSE THICKNESS BENEATH THE CURB AND GUTTER. PREMOLDED FIBER EXPANSION JOINTS, WITH TWO 3/4" X 18" EPOXY COATED STEEL DOWEL BARS, SHALL BE INSTALLED AT SIXTY (60) FOOT INTERVALS AND AT ALL PC'S, PT'S AND CURB RETURNS. ALTERNATE ENDS OF THE DOWEL BARS SHALL BE GREASED AND FITTED WITH METAL EXPANSION TUBES. SAWED OR FORMED CONTRACTION JOINTS SHALL BE PROVIDED AT NO GREATER THAN FIFTEEN (15) FOOT INTERVALS BETWEEN EXPANSION JOINTS. NO HONEY-COMBING OF THE CURB AND GUTTER WILL BE ACCEPTED.

C. CURBS SHALL BE DEPRESSED AT LOCATIONS WHERE PUBLIC WALKS/PEDESTRIAN PATHS INTERSECT CURB LINES, AND OTHER LOCATIONS AS DIRECTED, FOR THE PURPOSE OF PROVIDING ACCESSIBILITY. (SEE CONSTRUCTION STANDARDS FOR DETAIL). BARRIER CURB SHALL ALSO BE DEPRESSED AT DRIVEWAY LOCATIONS.

D. THE CURBS SHALL BE BACKFILLED AFTER THEIR CONSTRUCTION AND PRIOR TO THE PLACEMENT OF THE BASE COURSE. THE CONCRETE MUST CURE FOR AT LEAST SEVEN DAYS BEFORE THE CURBS ARE BACKFILLED.

E. CONCRETE SIDEWALK SHALL BE IN ACCORDANCE WITH THE ABOVE AND THE PLANS. PROVIDE SCORED JOINTS AT 5 FOOT INTERVALS AND 1/2 " PREMOLDED FIBER EXPANSION JOINTS AT 50 FOOT INTERVALS, AND ADJACENT TO CONCRETE CURBS, DRIVEWAYS, FOUNDATIONS, ETC.

F. CONCRETE DRIVEWAY APRONS SHALL BE IN ACCORDANCE WITH THE ABOVE AND THE PLANS. PROVIDE 6" X 6" NO. 6 WELDED WIRE MESH IN DRIVEWAYS. PROVIDE 1/2 " PREMOLDED FIBER EXPANSION JOINT ADJACENT TO CURBS AND CONCRETE SIDEWALKS. PROVIDE SAWED OR FORMED CONTRACTION JOINT AT MID-POINT AND 15 FOOT MAXIMUM.

G. STANDARD REINFORCED CONCRETE PAVEMENT SHALL BE IN ACCORDANCE WITH THE ABOVE AND THE PLANS. SAWED OR FORMED CONTRACTION EXPANSION JOINTS SHALL BE AS SHOWN ON THE PLANS.

H. CONCRETE CURING AND PROTECTION SHALL BE IN ACCORDANCE WITH (SSRBC) - METHOD I, II, OR III.

I. THE COST OF AGGREGATE BASE OR SUB-BASE UNDER CONCRETE WORK SHALL BE INCLUDED IN THE COST OF THE RESPECTIVE CONCRETE ITEM.

4. FLEXIBLE PAVEMENT

A. THE PAVEMENT MATERIALS FOR BITUMINOUS STREETS, PARKING LOTS, DRIVEWAYS, SIDEWALKS AND PATHS SHALL BE AS DETAILED ON THE PLANS, UNLESS OTHERWISE SHOWN ON THE PLANS. THE FLEXIBLE PAVEMENTS SHALL CONSIST OF AGGREGATE BASE COURSE, TYPE B; BITUMINOUS CONCRETE BINDER COURSE; AND BITUMINOUS CONCRETE SURFACE COURSE; OF THE THICKNESS AND MATERIALS SPECIFIED ON THE PLANS, THICKNESSES SPECIFIED SHALL BE CONSIDERED TO BE THE MINIMUM COMPACTED THICKNESS. THE PAVING IS TO BE DONE IN ACCORD WITH THE STANDARD SPECIFICATIONS FOR ROAD AND BRIDGE CONSTRUCTION IN ILLINOIS.

B. ALL TRAFFIC SHALL BE KEPT OFF THE COMPLETED AGGREGATE BASE UNTIL THE BINDER COURSE IS LAID. THE AGGREGATE BASE SHALL BE UNIFORMLY PRIME COATED AT A RATE OF 0.4 TO 0.5 GALLONS PER SQUARE YARD PRIOR TO PLACING THE BINDER COURSE. PRIME COAT MATERIALS SHALL BE BITUMINOUS M.C. - 30.

C. PRIOR TO PLACEMENT OF THE SURFACE COURSE, THE BINDER COURSE SHALL BE CLEANED, AND TACK COATED IF DUSTY OR DIRTY. ALL DAMAGED AREAS IN THE BINDER, BASE OR CURB SHALL BE REPAIRED TO THE SATISFACTION OF THE OWNER PRIOR TO LAYING THE SURFACE COURSE. THE CONTRACTOR SHALL PROVIDE WHATEVER EQUIPMENT AND MANPOWER NECESSARY, INCLUDING THE USE OF POWER BROOMS IF REQUIRED BY THE OWNER, TO PREPARE THE PAVEMENT FOR APPLICATION OF THE SURFACE COURSE. THE TACK COAT SHALL BE UNIFORMLY APPLIED TO THE BINDER COURSE AT A RATE OF 0.05 TO 0.10 GALLONS PER SQUARE YARD. TACK COAT SHALL BE AS SPECIFIED IN (SSRBC) SECTION 406.02.

D. SEAMS IN BASE, BINDER AND SURFACE COURSE SHALL BE STAGGERED A MINIMUM OF 6".

E. FOR NEW STREETS, THE CONTRACTOR SHALL PERMIT THE BITUMINOUS CONCRETE BINDER COURSE TO WEATHER ONE (1) WINTER SEASON PRIOR TO THE INSTALLATION OF THE BITUMINOUS CONCRETE SURFACE COURSE UNLESS OTHERWISE SPECIFIED BY THE MUNICIPAL ENGINEER OR OWNER.

5. TESTING AND FINAL ACCEPTANCE

A. THE CONTRACTOR SHALL FOLLOW THE QUALITY CONTROL TESTING PROGRAM FOR CONCRETE AND PAVEMENT MATERIALS ESTABLISHED BY THE OWNER AND/OR MUNICIPALITY. TESTING SHALL BE DONE IN ACCORD WITH THE STANDARD SPECIFICATIONS FOR ROAD AND BRIDGE CONSTRUCTION IN ILLINOIS AND THE TESTING REQUIREMENTS OF THE MUNICIPALITY.

B. WHEN REQUESTED BY THE OWNER, TEST RESULTS AND DOCUMENTATION FOR THE CONCRETE, BASE COURSE, BITUMINOUS CONCRETE BINDER, AND/OR SURFACE COURSE, SHALL BE SUBMITTED FOR VERIFICATION.

C. PRIOR TO PLACEMENT OF THE BITUMINOUS CONCRETE SURFACE COURSE, THE CONTRACTOR, WHEN REQUIRED BY THE OWNER OR MUNICIPALITY, SHALL OBTAIN SPECIMENS OF THE BINDER COURSE WITH A CORE DRILL WHERE DIRECTED, FOR THE PURPOSE OF THICKNESS VERIFICATION.

D. WHEN REQUIRED BY THE OWNER OR MUNICIPALITY, THE CONTRACTOR SHALL OBTAIN SPECIMENS OF THE FULL DEPTH BITUMINOUS CONCRETE PAVEMENT STRUCTURE WITH A CORE DRILL WHERE DIRECTED, IN ORDER TO CONFIRM THE PLAN THICKNESS. DEFICIENCIES IN THICKNESS SHALL BE ADJUSTED FOR BY THE METHOD DESCRIBED IN (SSRBC), ART. 407.10.

E. FINAL ACCEPTANCE OF THE TOTAL PAVEMENT INSTALLATION SHALL BE SUBJECT TO THE TESTING AND CHECKING REQUIREMENTS CITED ABOVE.

SEE SHEET C11.2 FOR LAKE COUNTY PUBLIC WORKS SANITARY SPECIFICATIONS. LAKE COUNTY PUBLIC WORKS SPECIFICATIONS SHALL GOVERN FOR SANITARY IN ANY INSTANCE OF CONFLICT WITHIN SPECIFICATIONS AND DETAILS THE ENGINEER SHALL BE NOTIFIED FOR REVIEW OF REQUIREMENTS

SANITARY SEWER NOTES

1. GENERAL

A. SANITARY SEWER PIPE SHALL BE PVC (POLYVINYL CHLORIDE) PLASTIC PIPE WITH A STANDARD DIMENSION RATIO (SDR) OF 26 CONFORMING TO ASTM D-3034 WITH PUSH-ON JOINTS CONFORMING TO ASTM D-3212 AND PVC (POLYVINYL CHLORIDE) PLASTIC PIPE WITH A STANDARD DIMENSION RATIO (SDR) OF 21 CONFORMING TO ASTM D-2241 WITH PUSH-ON JOINTS CONFORMING TO ASTM D-3139 AS SHOWN ON THE PLANS. PAYMENT SHALL BE MADE AT THE CONTRACT UNIT PRICE PER LINEAL FOOT OF SANITARY SEWER COMPLETE IN PLACE.

B. SANITARY SEWER PIPE 18" AND LARGER, WHERE NOTED ON THE PLANS, OR WHERE THE IEPA MINIMUM SEPARATION CANNOT BE MAINTAINED, SHALL BE ONE OF THE FOLLOWING:

PLAN CODE DESCRIPTION

DIP: DUCTILE IRON WATERMAIN QUALITY PIPE, CLASS 52, (ANSI A-21,51) WITH MECHANICAL OR O-RING GASKETED JOINTS (ANSI A-21,11).

PVC: PRESSURE RATED PVC PIPE MEETING ASTM D-2241 WITH ASTM D-3139 GASKETED JOINT, SDR 26

C. "BAND-SEAL" OR SIMILAR FLEXIBLE TYPE COUPLINGS SHALL BE USED WHEN CONNECTING SEWER PIPES OF DISSIMILAR MATERIALS. "BAND-SEAL", "FERNCO", AND "MISSION" TYPE COUPLINGS SHALL NOT BE USED ON ANY SEWER MAIN.

D. ALL SANITARY SEWERS ARE TO BE CONSTRUCTED USING A LASER INSTRUMENT TO MAINTAIN LINE AND GRADE.

E. ALL FLOOR DRAINS SHALL CONNECT TO THE SANITARY SEWER.

F. CONNECTIONS TO EXISTING SANITARY SEWER SYSTEM SHALL NOT BE DONE UNTIL AUTHORIZED BY THE MUNICIPALITY.

G. WATERMAINS SHALL BE SEPARATED FROM SANITARY SEWERS AND STORM SEWERS IN ACCORDANCE WITH IEPA REQUIREMENTS AS SPECIFIED IN "WATER MAIN" SECTION.

H. NO WATER LINE SHALL BE PLACED IN THE SAME TRENCH AS A SEWER LINE EXCEPT UNDER SPECIAL CIRCUMSTANCES AND THEN ONLY UNDER THE FOLLOWING RULES:

a) PERMISSION SHALL BE OBTAINED FROM THE MUNICIPAL ENGINEERING DEPARTMENT IN WRITING PRIOR TO BEGINNING CONSTRUCTION.
b) THE BOTTOM OF A WATER LINE SHALL BE INSTALLED ON A SHELF A MINIMUM OF 18" ABOVE THE TOP OF THE SEWER AND 18" HORIZONTALLY AWAY FROM THE EDGE OF THE SEWER.

2. BEDDING:

A. BEDDING SHALL CONSIST OF A MINIMUM OF FOUR (4") INCHES OF COMPACTED CRUSHED GRAVEL OR STONE, 1/4 " -3/4 " IN SIZE. THE SEWER SHALL HAVE MECHANICALLY TAMPED CRUSHED GRAVEL OR STONE COVER ABOVE THE TOP OF THE PIPE TO A MINIMUM OF TWELVE (12") INCHES FOR PVC PIPE AND TO THE SPRING LINE FOR DIP. THE BEDDING AND COVER MATERIAL SHALL BE ASTM D-2321 CLASS II FOR PVC PIPE AND ASTM D-448 SIZE 67 FOR DIP PIPE. THE COST OF THE BEDDING AND COVER SHALL BE MERGED WITH THE UNIT PRICE BID FOR THE SEWER.

B. ALL UNSUITABLE MATERIAL SHALL BE REMOVED BELOW THE PROPOSED SANITARY SEWER AND REPLACED WITH COMPACTED CA-6 CRUSHED GRAVEL OR STONE.

C. ALL TRENCHES BENEATH PROPOSED OR EXISTING UTILITIES, PAVEMENTS, ROADWAYS, SIDEWALKS, AND FOR A DISTANCE OF FIVE (5') FEET ON EITHER SIDE OF SAME, AND/OR WHERE SHOWN ON THE PLANS, SHALL BE BACKFILLED WITH SELECT GRANULAR BACKFILL (CA-6) AND THOROUGHLY MECHANICALLY COMPACTED IN 9" THICK (LOOSE MEASUREMENT) LAYERS. JETTING WITH WATER IS NOT PERMITTED. REFER TO THE TRENCH BACKFILL LIMITS DETAIL.

3. MANHOLES:

A. SANITARY SEWER MANHOLES SHALL BE 4'-0" I.D. PRECAST CONCRETE SECTIONS CONFORMING TO ASTM D-478 WITH PREFORMED BITUMINOUS OR "O" RING JOINTS, IN ACCORDANCE WITH MUNICIPAL REGULATIONS, AND HAVE AN ECCENTRIC CONE INSTALLED TO LINE UP WITH THE MANHOLE STEPS. ALL MANHOLE STEPS SHALL BE AT 16" O.C. SIMILAR TO NEENAH R-1980.

B. ALL PIPE CONNECTION OPENINGS SHALL BE PRECAST WITH RESILIENT RUBBER WATER TIGHT SLEEVES. THE BOTTOM OF MANHOLE SHALL HAVE A CONCRETE BENCH POURED TO FACILITATE SMOOTH FLOWS.

4. FRAMES AND LIDS:

A. ALL SANITARY SEWER MANHOLE FRAMES AND LIDS SHALL BE NEENAH R-1712 UNLESS OTHERWISE NOTED ON THE PLANS. THE LIDS SHALL HAVE RECESSED (CONCEALED) PICK HOLE AND BE SELF SEALING WITH AN "O" RING GASKET. THE LIDS SHALL HAVE THE WORDS "SANITARY" EMBOSSED ON THE SURFACE. THE JOINTS BETWEEN FRAME AND CONCRETE SECTION SHALL BE SEALED WITH A BUTYL ROPE.

B. A MAXIMUM OF EIGHT (8) INCHES OF CONCRETE ADJUSTING RINGS SHALL BE USED TO ADJUST FRAME ELEVATIONS. RINGS SHALL BE SEALED TOGETHER WITH BUTYL ROPE.

5. DROP MANHOLE ASSEMBLIES:

A. DROP MANHOLE ASSEMBLIES: DROP MANHOLE ASSEMBLIES SHALL BE PROVIDED AT THE JUNCTION OF SANITARY SEWERS WHERE THE DIFFERENCE IN INVERT GRADES EXCEEDS TWO FEET (2'), OR AS SHOWN ON THE PLANS. THE ENTIRE DROP ASSEMBLY SHALL BE CAST IN CONCRETE MONOLITHICALLY WITH THE MANHOLE BARREL SECTION.

6. CLEANING:

A. ALL MANHOLES AND PIPES SHALL BE THOROUGHLY CLEANED OF DIRT AND DEBRIS. AND ALL VISIBLE LEAKAGE ELIMINATED, BEFORE FINAL INSPECTION AND ACCEPTANCE.

7. TESTING:

A. DEFLECTION AND LEAKAGE TESTING WILL BE REQUIRED. THE PROCEDURE AND ALLOWABLE TESTING LIMITS SHALL BE AS SPECIFIED IN THE "STANDARD SPECIFICATIONS FOR WATER AND SEWER MAIN CONSTRUCTION IN ILLINOIS", OR MUNICIPAL CODES. IN THE EVENT OF A DISCREPANCY BETWEEN THE STANDARD SPECIFICATIONS AND THE MUNICIPAL CODE, THE MUNICIPAL CODE SHALL GOVERN. THE FULL LENGTH OF THE SANITARY SEWER IS REQUIRED TO BE BOTH AIR TESTED AND DEFLECTION TESTED.

B. TESTING THE ALIGNMENT/STRAIGHTNESS SHALL BE IN ACCORDANCE WITH MUNICIPAL CODE.

C. TESTING OF MANHOLES TO BE IN ACCORDANCE WITH ASTM C-969.

8. TELEVISING:

A. ALL SANITARY SEWERS SHALL BE TELEVISED AND A COPY OF THE TAPE /DVD AND A WRITTEN REPORT SHALL BE SUBMITTED AND REVIEWED BY THE OWNER OR MUNICIPALITY BEFORE FINAL ACCEPTANCE. THE REPORT SHALL INCLUDE STUB LOCATION AS WELL AS A DESCRIPTION OF ALL DEFECTS, WATER LEVEL, LEAKS AND LENGTHS. IDENTIFY MANHOLE TO MANHOLE BOTH VERBALLY AND ON-SCREEN USING MANHOLE NUMBERS FROM APPROV

Lake County Public Works Notes for Sanitary Sewer Improvements

General

1. All sewer and water mains shall be constructed in accordance with the standard specifications and construction details and ordinances of Lake County Public Works (LCPW), Illinois Recommended Standards for Sewage Works, latest edition and the Standard Specifications for Sewer and Water Construction in Illinois, latest edition, and the Standard Specifications for Road and Bridge Construction in Illinois, latest edition.

2. Contractor shall notify LCPW at least two (2) working days (48 hours) prior to the start of water and/or sewer construction at 847-377-7500.

3. LCPW shall be granted access to all parts of the construction site and shall have the authority to inspect, approve, and/or reject all water main, water service, sanitary sewer and sanitary service improvements.

4. All sanitary sewer and water main shall be inspected and approved by LCPW prior to backfill.

Sanitary Sewer

1. Sanitary sewers and sewer services up to a depth of 14 feet shall be constructed of polyvinyl chloride plastic gravity sewer pipe (PVC) conforming to ASTM designation D3034 with an SDR of 26 with push-on elastomeric gasket joints conforming to ASTM D3212. See LCPW Standard specifications for pipe material over 14 feet in depth.

2. All sanitary service connections to new mainline sewer shall be made with precast wyes or tees manufactured specifically for that purpose. Sanitary sewer riser and service material shall be same as mainline sewer. Pipe and fittings shall be a minimum of SDR 26.

3. Sanitary services shall be laid to a minimum grade of 1.00%. The end of each service shall be sealed with a manufacturer's watertight plug. Sanitary service stubs shall be marked with a 4"x4" post that extends a minimum of 3 feet into the ground and 4 feet above finish grade with the top 12-inches painted red.

4. Sewer service riser shall be used when mainline sewer exceeds 12-feet in depth.

5. A current color video recording and a type written transcription of the internal inspection of the newly constructed sanitary sewer system shall be submitted to LCPW and the municipality as applicable. This work shall include the rotation of the lens to look up\at each service.

6. All sanitary sewers including service lines shall be cleaned and subjected to an air test, applicable deflection test and TV inspection by the contractor.

7. Sanitary manholes shall be vacuum tested in accordance with ASTM C969 or ASTM C1244.

8. An acceptable inflatable sewer pressure plug shall be installed in the downstream connection manhole on the new pipe. The sewer plug shall have a gauge placed just under the manhole rim for visual inspection of plug inflation without requiring manhole access.

Record Drawings

1. Drawings must be signed and sealed by a Professional Engineer or Professional Land Surveyor Licensed in the State of Illinois. Drawings shall be created using CAD, approved record drawing files shall be submitted in either ArcGIS (preferred), MicroStation, or AutoCAD format with one paper copy. Under either circumstance, an Adobe PDF of the Record Documents shall be included.

2. Submitted drawings shall be no smaller than 11" x 17" or larger than 24" x 36". The scale shall be 1" = 50' or greater

3. State Plane Coordinates, Eastern Zone, NAD 83 NSRS2007, with minimum sub foot accuracy. Vertical datum shall be NAVD88.

4. The drawings shall include any and all approved field changes.

5. All structures (manholes, valve vaults, valve boxes, hydrants, b-boxes) shall have GPS coordinates including northing, easting and vertical elevation.

Sanitary Sewer Improvements – Record Drawings

1. All Manholes shall be numbered with record rim and invert elevations.

2. All pipes shall include lineal footage between center of manholes, diameter of pipe, material type, and record slope.

3. All sewer services shall be identified by stationing from the nearest downstream manhole and the end of the service shall have GPS coordinates (northing and easting). Information required includes lineal footage of lateral and height of riser.

NO.	DATE	REMARKS

NO.	DATE	REMARKS

LAKE COUNTY PUBLIC WORKS SPECIFICATIONS

BRIDGE POINT O'HARE NORTH
DEERFIELD, IL

CONSULTING ENGINEERS
SITE DEVELOPMENT ENGINEERS
LAND SURVEYORS
9575 W. Higgins Road, Suite 700,
Rosemont, Illinois 60018
Phone: (847) 696-4060 Fax: (847) 696-4065

SPACECO INC.

FILENAME:
12271SPEC2

DATE:
03/24/23

JOB NO.
12271

SHEET
C11.2
58 OF 63

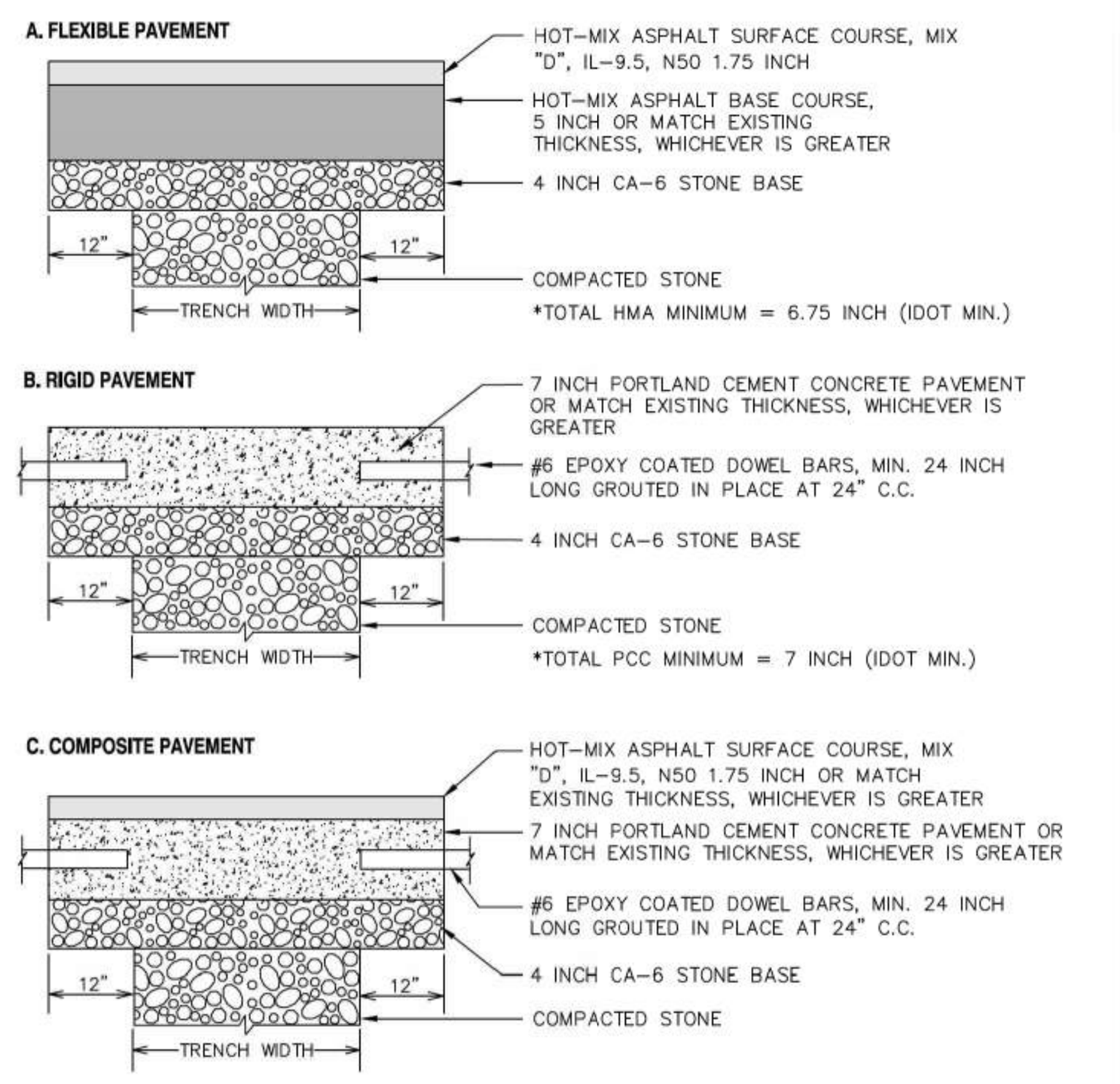

NOTES:
SECTIONS REPRESENT THE MINIMUM CROSS SECTION ALLOWED. PAVEMENT DESIGN IS PERFORMANCE BASED AS OUTLINED IN SECTION IV G.5.

1. ALL PAVEMENT PATCHES SHALL BE SAWCUT FULL–DEPTH A MINIMUM OF ONE FOOT BEYOND THE LIMITS OF PAVEMENT REMOVAL IN ALL DIRECTIONS.
2. THE PLACEMENT AND MATERIAL OF ALL HOT–MIX ASPHALT SHALL BE IN ACCORDANCE WITH SECTION(S) 406 AND 1030 OF THE STANDARD SPECIFICATIONS. ALL ASPHALT SHALL BE AN IDOT APPROVED MIX DESIGN.
3. PORTLAND CEMENT CONCRETE SHALL BE IN ACCORDANCE WITH SECTION 1020 OF THE STANDARD SPECIFICATIONS.
4. ALL SUBGRADE SHALL BE COMPACTED TO 90% MODIFIED PROCTOR DENSITY AND AGGREGATE BASE SHALL BE COMPACTED TO 95% CONFORMING TO ASTM D–1557.
5. ALL PATCHES TO BE COMPLETED USING PCC UNLESS OTHERWISE APPROVED BY VILLAGE ENGINEERING DEPARTMENT

REVISED FEBRUARY 2022

VILLAGE OF DEERFIELD

MINIMUM PAVEMENT / PAVEMENT PATCH DETAIL

NOT TO SCALE

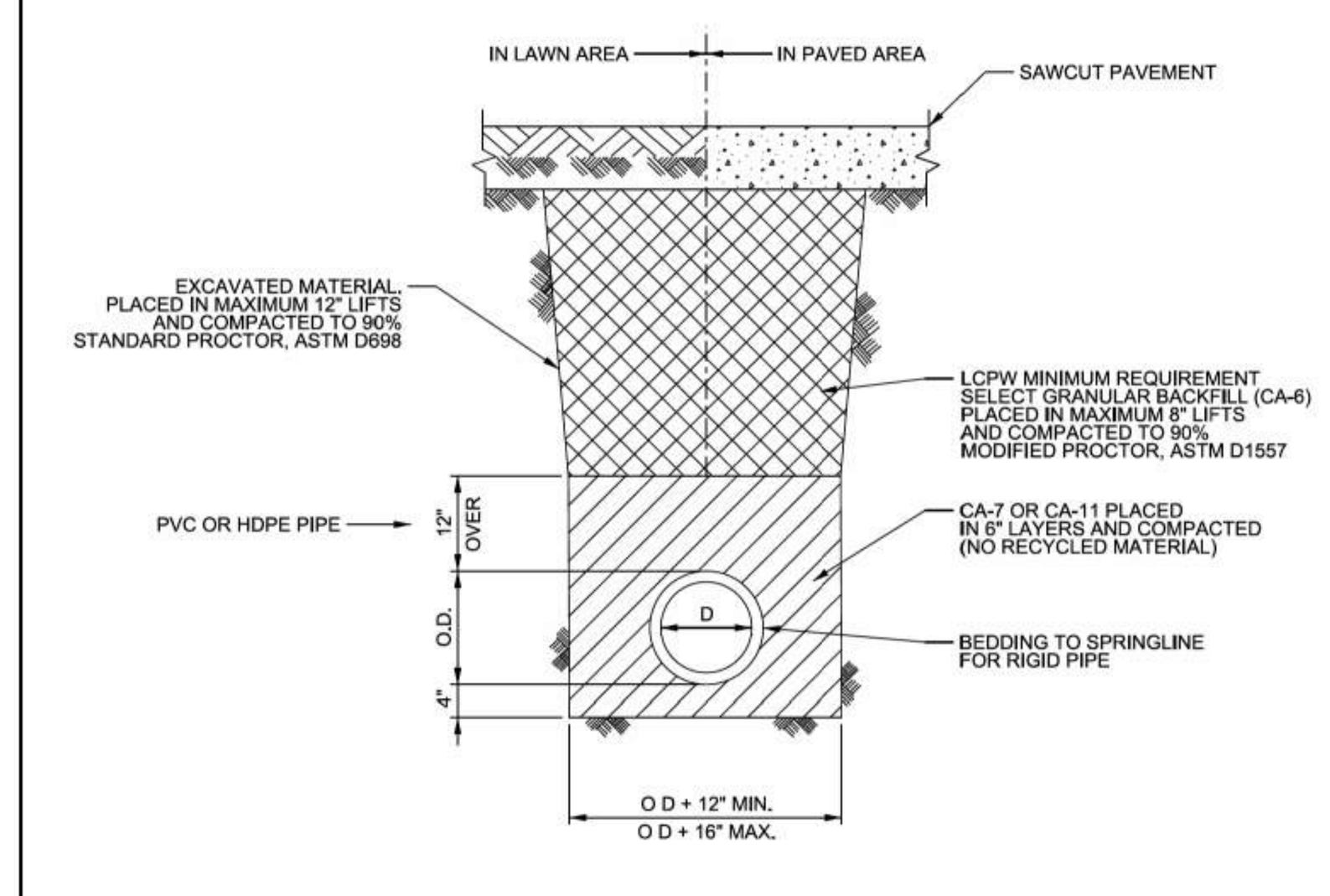

NOTE:

CONFIRM REQUIREMENTS OF LOCAL MUNICIPALITY AND ROADWAY AUTHORITY REGARDING THEIR SPECIFIC BEDDING AND BACKFILL MATERIAL STANDARDS

Lake County Department of Public Works

PIPE BEDDING TRENCH BACKFILL

DATE: 6/26/15 | ID: 3

REVISIONS	DATE
ENG-MAIN. UPDATE	7/24/18
ENG-MAIN. UPDATE	9/20/18
ENG-MAIN. UPDATE	12/14/20

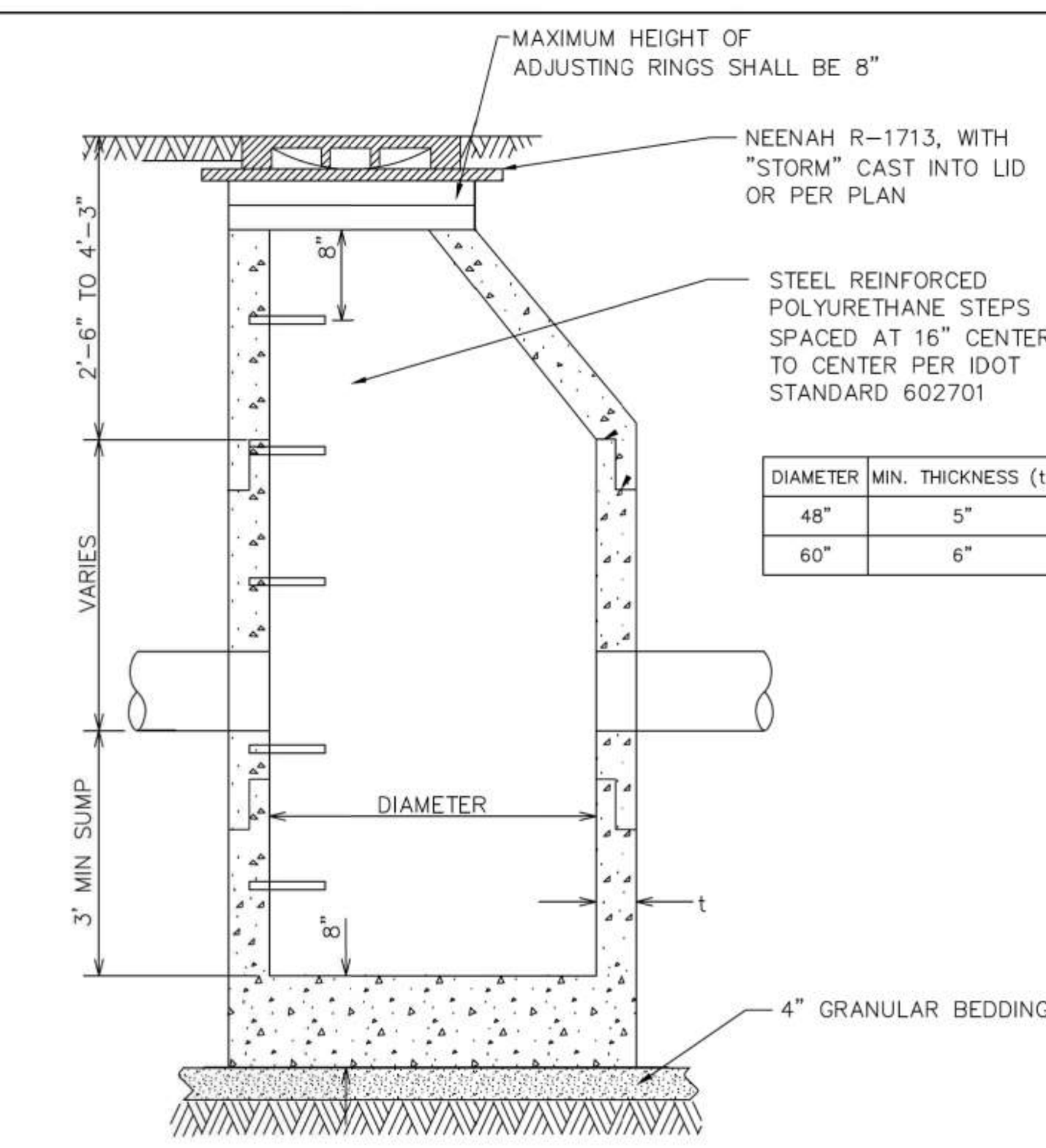

DIAMETER	MIN. THICKNESS (t)
48"	5"
60"	6"

NOTES:

1. PRECAST REINFORCED CONCRETE SECTIONAL PER ASTM C–478 AND PREFORMED BITUMINOUS JOINTS WITH INTEGRAL PRECAST BOTTOM.
2. PIPE OPENINGS SHALL BE PRECAST INTO WALLS.
3. ALL PIPE PENETRATIONS SHALL BE BRICK AND MORTARED, INSIDE AND OUT.
4. HIGH DENSITY POLYETHYLENE (HDPE) PLASTIC ADJUSTING RINGS AND STEEL RING WEDGES OR SHIMS SHALL BE USED FOR FINAL FRAME ADJUSTMENTS.
5. FLAT TOPS SHALL BE ACCORDING TO IDOT STANDARD 602601.

REVISED FEBRUARY 2022

VILLAGE OF DEERFIELD

CATCH BASIN TYPE A DETAIL

NOT TO SCALE

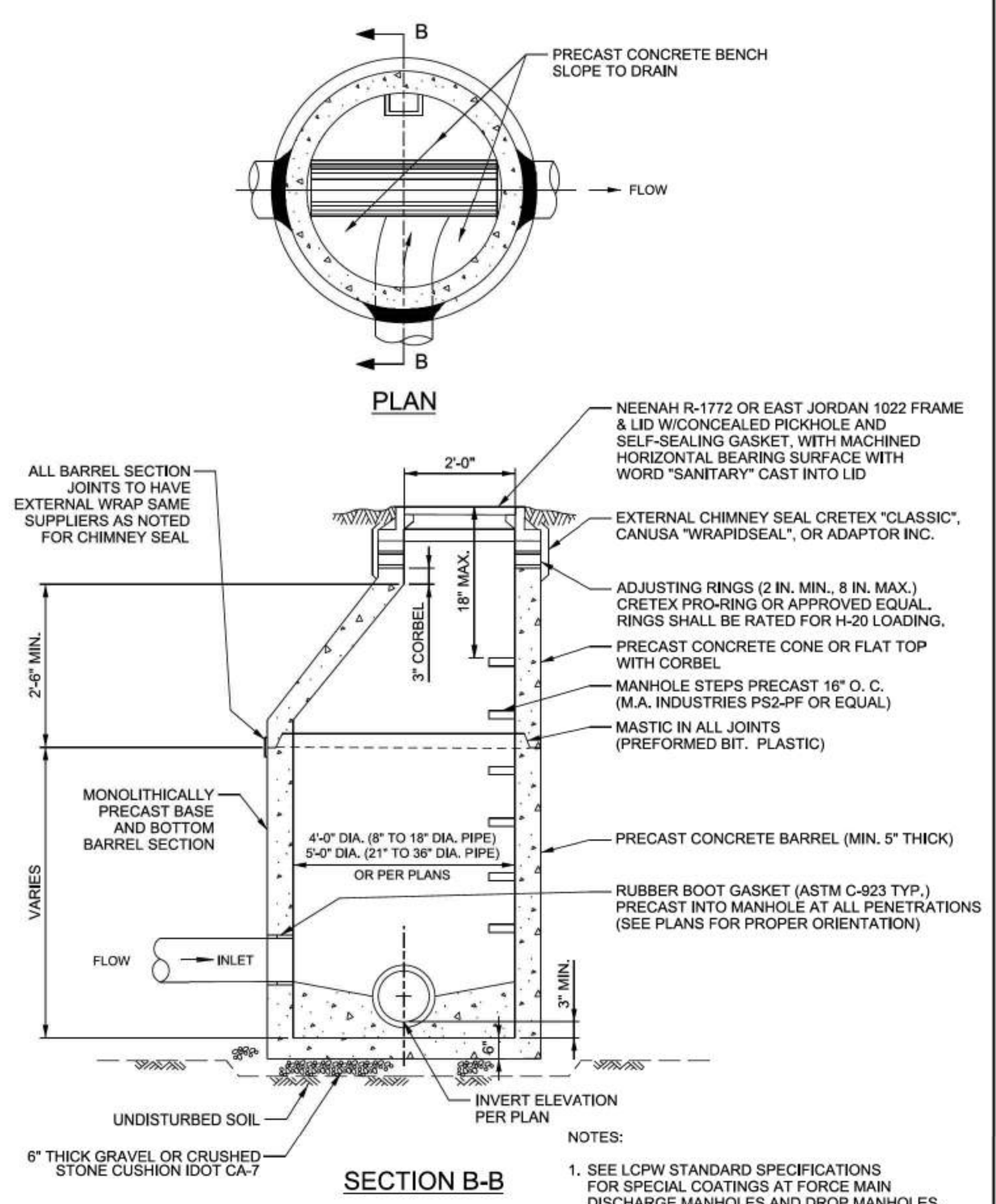

NOTES:

1. SEE LCPW STANDARD SPECIFICATIONS FOR SPECIAL COATINGS AT FORCE MAIN DISCHARGE MANHOLES AND DROP MANHOLES.
2. ALL MANHOLES SHALL BE VACUUM TESTED.

Lake County Department of Public Works

SANITARY MANHOLE

DATE: 6/26/15 | ID: 1

REVISIONS	DATE
ENG-MAIN. UPDATE	7/24/18
ENG-MAIN. UPDATE	12/14/20

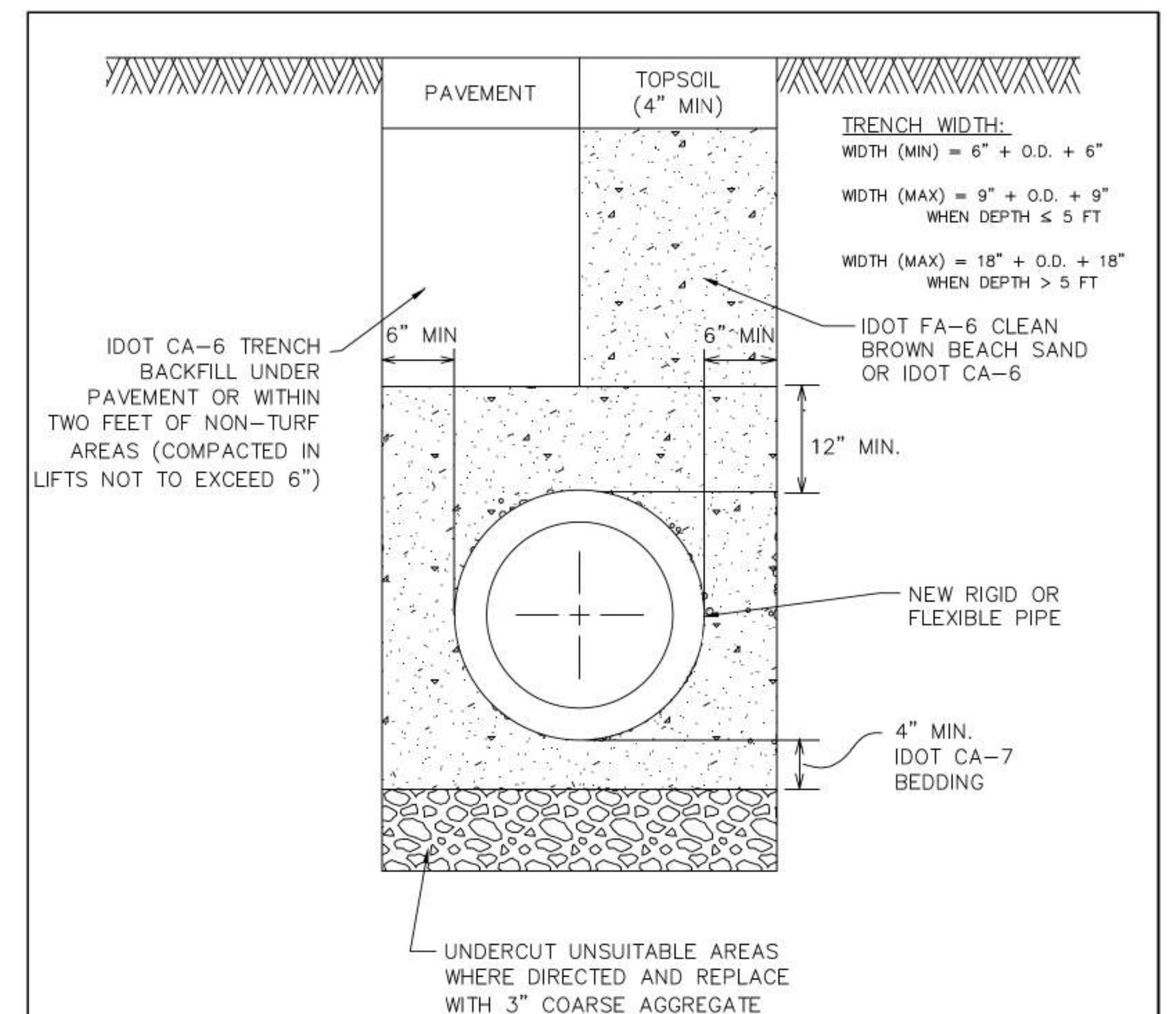

NOTES:

1. ALL TRENCH EXCAVATIONS SHALL MEET OSHA REQUIREMENTS.
2. BACKFILL ON PRIVATE PROPERTY: CA–6 BACKFILL RECOMMENDED BY VILLAGE. INORGANIC EXCAVATED MATERIAL ACCEPTABLE ON PRIVATE PROPERTY.
3. ALL EXCAVATIONS WITHIN THE ROW SHALL USE COMPACTED STONE OR SAND AS BACKFILL MATERIAL. EXCAVATED MATERIALS SHALL NOT BE ALLOWED.

REVISED FEBRUARY 2022

VILLAGE OF DEERFIELD

PIPE TRENCH DETAIL

NOT TO SCALE

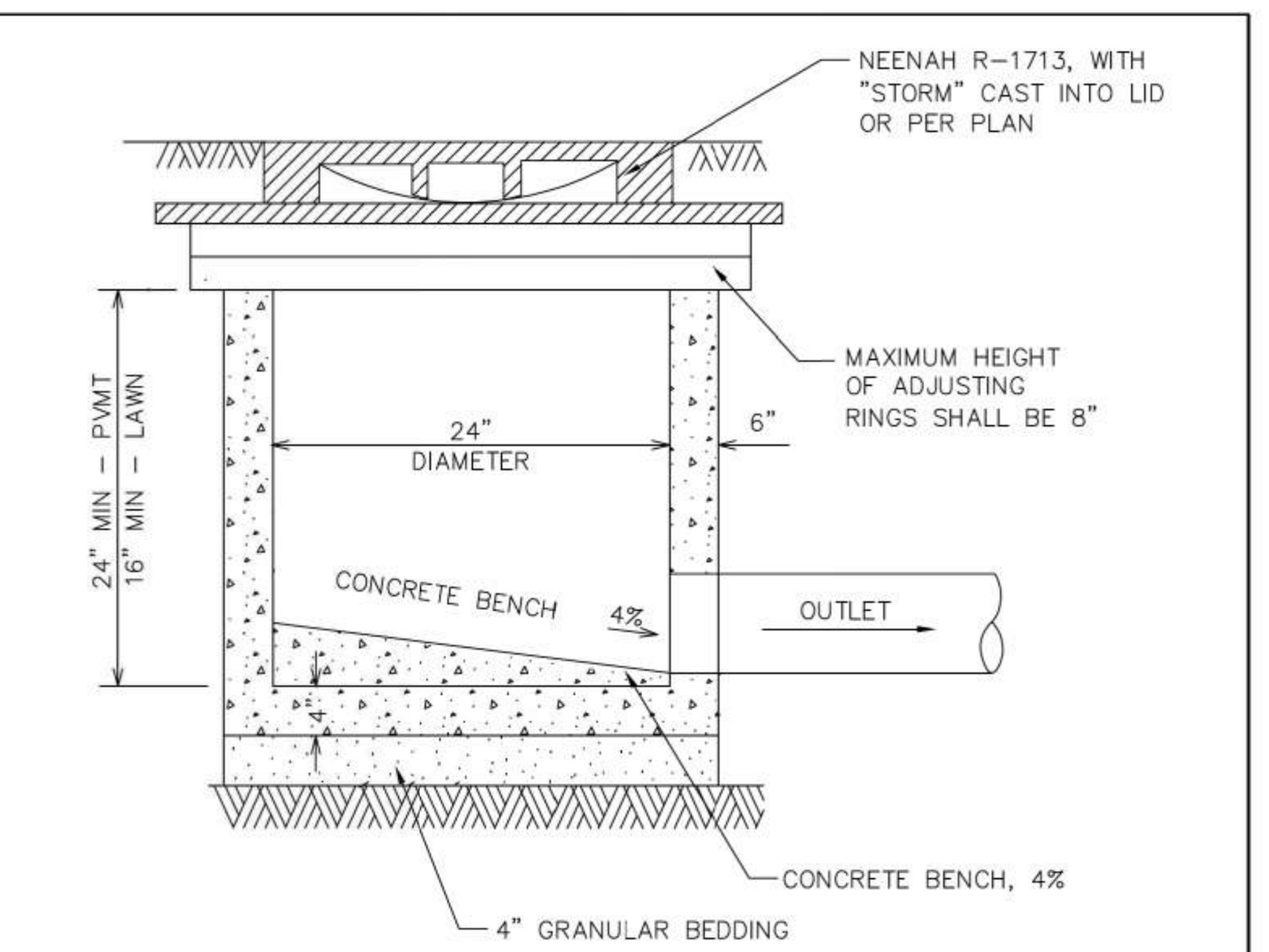

NOTES:

1. PRECAST REINFORCED CONCRETE SECTIONS PER ASTM C–478 AND PREFORMED BITUMINOUS JOINTS WITH INTEGRAL PRECAST BOTTOM.
2. PIPE OPENINGS SHALL BE PRECAST INTO WALLS.
3. ALL PIPE PENETRATIONS SHALL BE BRICK AND MORTARED, INSIDE AND OUT.
4. HIGH DENSITY POLYETHYLENE (HDPE) PLASTIC ADJUSTING RINGS AND STEEL RING WEDGES OR SHIMS SHALL BE USED FOR FINAL FRAME ADJUSTMENTS.
5. MAXIMUM DEPTH FROM INVERT OF OUTLET PIPE TO TOP OF FRAME SHALL NOT EXCEED 42 INCHES IF DESIGN OR CONSTRUCTION REQUIRES DEPTH BEYOND 42 INCHES, STRUCTURE SHALL BE REVISED TO A CATCH BASIN, TYPE A, 48 INCH DIAMETER.

REVISED FEBRUARY 2022

VILLAGE OF DEERFIELD

INLET TYPE A DETAIL

NOT TO SCALE

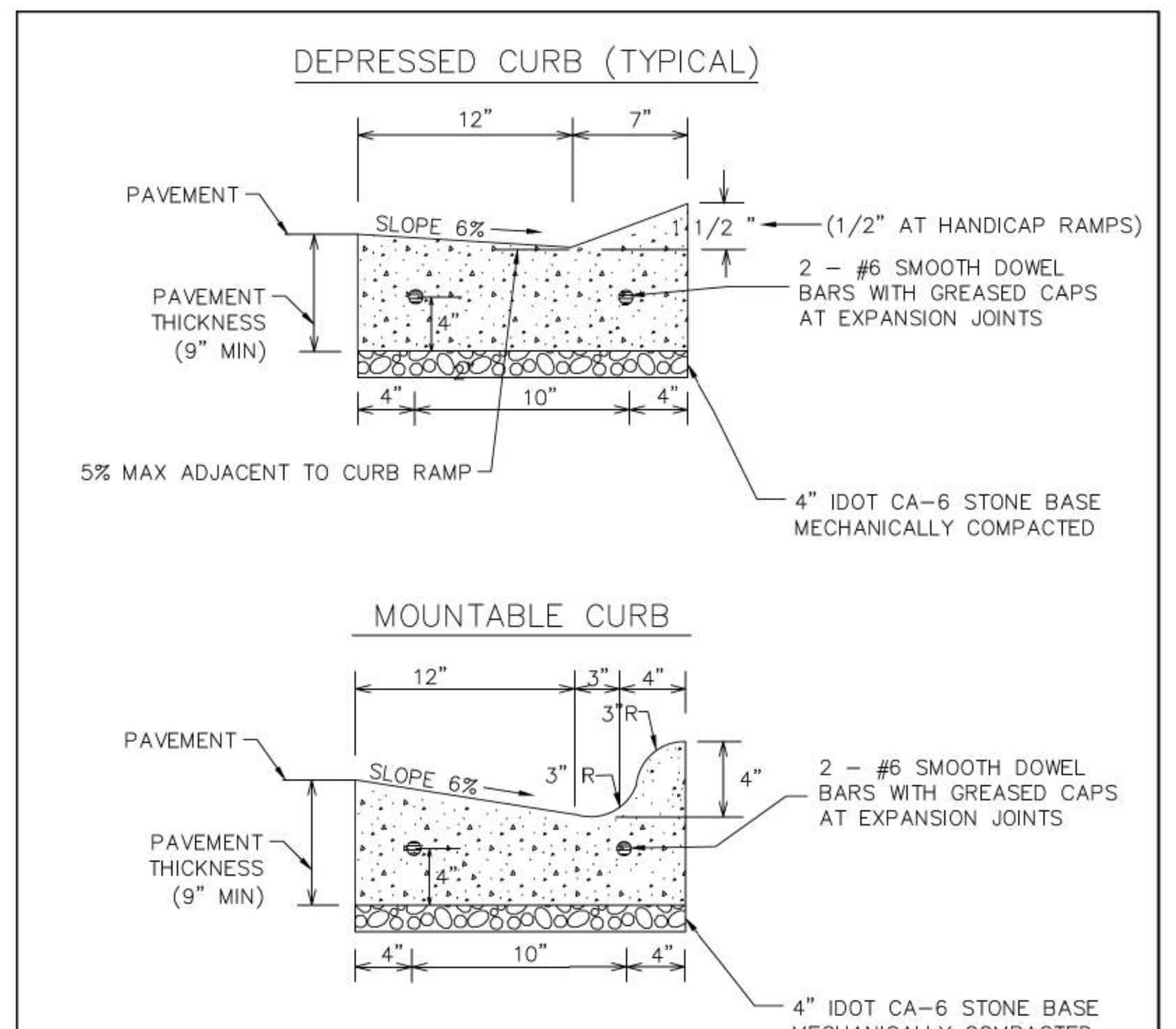

NOTES:

1. CONTRACTION JOINTS SHALL BE PLACED AT 15' INTERVALS, AND SHALL BE GROOVED WITH AN EDGING TOOL. SEE ARTICLE 420.10 OF IDOT STANDARD SPECIFICATIONS. SAW CUT CONTRACTION JOINTS FULL FACE AND TOP, AT LEAST 2 INCHES IN DEPTH AND AT 15' MAX INTERVALS WITHIN 24 HOURS OF POURING.
2. SET EXPANSION JOINTS AT ALL PC'S, PT'S, CURB RETURNS, FIVE FOOT ON EITHER SIDE OF ANY FRAMES, 60' MAX INTERVALS, AND AT THE END OF EACH POUR.
3. PORTLAND CEMENT CONCRETE SHALL BE IN ACCORDANCE WITH SECTION 1020 OF THE STANDARD SPECIFICATIONS.

REVISED FEBRUARY 2022

VILLAGE OF DEERFIELD

COMBINATION CONCRETE CURB AND GUTTER, TYPE M

NOT TO SCALE

PITCH OUT CURB AND GUTTER TO HAVE A MIN. 1-2% MAX. SLOPE FOR GUTTER

PIPE DIA.	APPROX. QTY. lbs. (kg)	WALL	A	B	C	D	E	G	R	APPROX. SLOPE
12 (300)	530 (240)	2 (51)	4 (102)	24 (610)	4'-0⅞" (1.241 m)	6'-0⅞" (1.851 m)	24 (610)	2 (51)	9 (229)	1:2.4
15 (375)	740 (335)	2¼ (57)	6 (152)	27 (686)	3'-10" (1.168 m)	6'-1" (1.854 m)	30 (762)	2¼ (57)	11 (280)	1:2.4
18 (450)	990 (450)	2½ (64)	9 (229)	27 (686)	3'-10" (1.168 m)	6'-1" (1.854 m)	36 (914)	2½ (64)	12 (305)	1:2.4
21 (525)	1280 (580)	2¾ (70)	9 (229)	35 (889)	38 (965)	6'-1" (1.854 m)	3'-6" (1.067 m)	2¾ (70)	13 (330)	1:2.4
24 (600)	1520 (690)	3 (76)	9½ (241)	3'-7½" (1.105 m)	30 (762)	6'-1½" (1.867 m)	4'-0" (1.219 m)	3 (76)	14 (356)	1:2.5
27 (675)	1930 (875)	3¼ (83)	10½ (267)	4'-0" (1.219 m)	25½ (648)	6'-1½" (1.867 m)	4'-6" (1.372 m)	3¼ (83)	14½ (368)	1:2.4
30 (750)	2190 (995)	3½ (89)	12 (305)	4'-6" (1.375 m)	19¾ (502)	6'-1¾" (1.874 m)	5'-0" (1.524 m)	3½ (89)	15 (381)	1:2.5
33 (825)	3200 (1450)	3¾ (95)	13½ (343)	4'-10½" (1.486 m)	39¼ (997)	8'-1¾" (2.483 m)	5'-6" (1.676 m)	3¾ (95)	17½ (445)	1:2.5
36 (900)	4100 (1860)	4 (102)	15 (381)	5'-3" (1.6 m)	34¾ (883)	8'-1¾" (2.483 m)	6'-0" (1.829 m)	4 (102)	20 (508)	1:2.5
42 (1050)	5380 (2440)	4½ (114)	21 (533)	5'-3" (1.6 m)	35 (889)	8'-2" (2.489 m)	6'-6" (1.981 m)	4½ (114)	22 (559)	1:2.5
48 (1200)	6550 (2970)	5 (127)	24 (610)	6'-0" (1.829 m)	26 (660)	8'-2" (2.489 m)	7'-0" (2.134 m)	5 (127)	22 (559)	1:2.5
54 (1350)	8240 (3740)	5½ (140)	27 (686)	5'-5" (1.651 m)	35 (889)	8'-4" (2.54 m)	7'-6" (2.286 m)	5½ (140)	24 (610)	1:2.0
60 (1500)	8730 (3960)	6 (152)	35 (889)	5'-0" (1.524 m)	39 (991)	8'-3" (2.515 m)	8'-0" (2.438 m)	5 (127)	*	1:1.9
66 (1650)	10710 (4860)	6½ (165)	30 (762)	6'-0" (1.829 m)	27 (686)	8'-3" (2.515 m)	8'-6" (2.591 m)	5½ (140)	*	1:1.7
72 (1800)	12520 (5680)	7 (178)	36 (914)	6'-6" (1.981 m)	21 (533)	8'-3" (2.514 m)	9'-0" (2.743 m)	6 (152	*	1:1.8
78 (1950)	14770 (6700)	7½ (191)	36 (914)	7'-6" (2.286 m)	21 (533)	9'-3" (2.819 m)	9'-6" (2.896 m)	6½ (165)	*	1:1.8
84 (2100)	18160 (8240)	8 (203)	36 (914)	7'-6½" (2.299 m)	21 (533)	9'-3½" (2.832 m)	10'-0" (3.048 m)	6½ (165)	*	1:1.6

* Radius as furnished by manufacturer

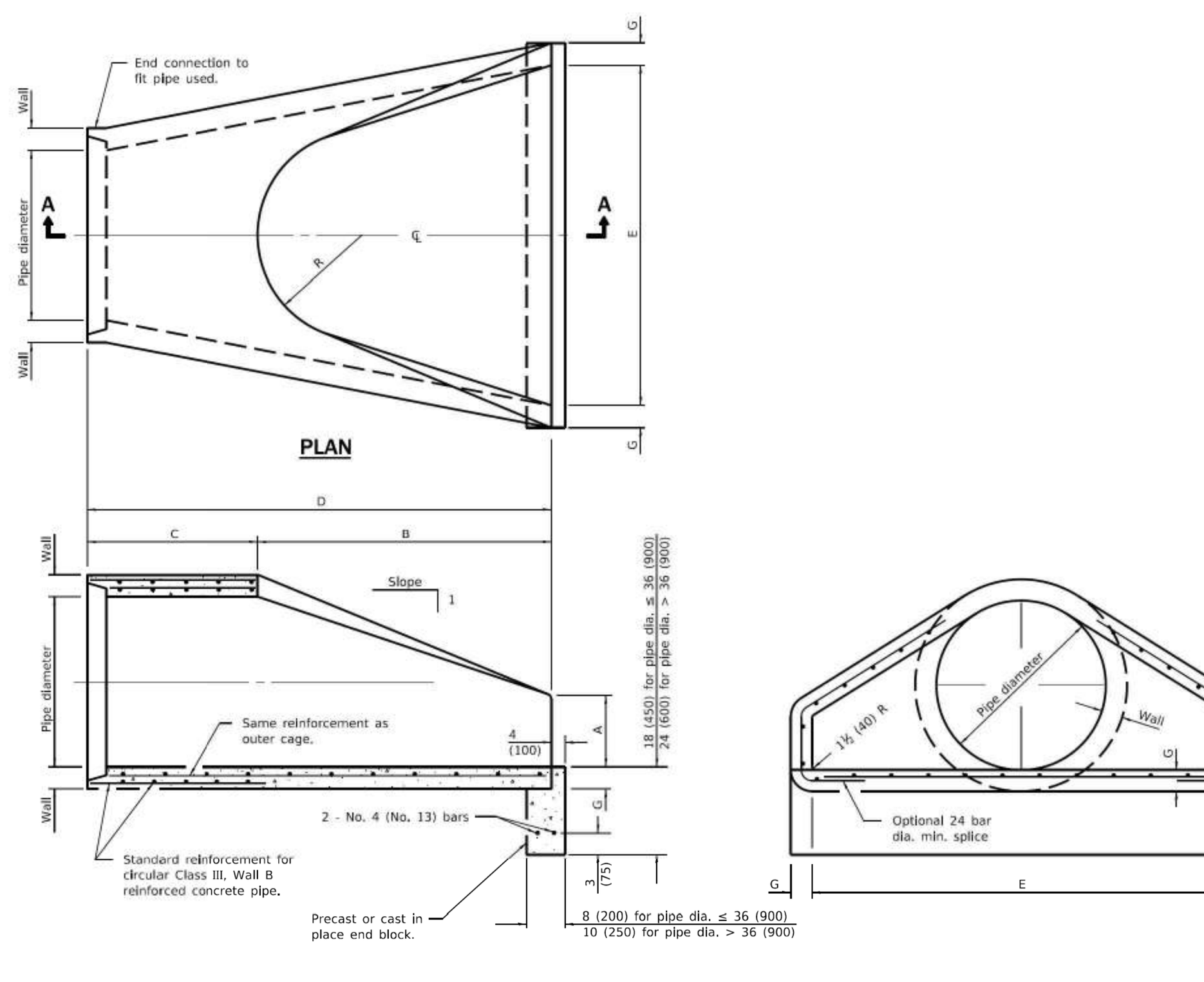

GENERAL NOTES

All slope ratios are expressed as units of vertical displacement to units of horizontal displacement (V:H).

All dimensions are in inches (millimeters) unless otherwise shown.

Illinois Department of Transportation

APPROVED January 1, 2011 — ENGINEER OF BRIDGES AND STRUCTURES

APPROVED January 1, 2011 — ENGINEER OF DESIGN AND ENVIRONMENT

ISSUED 1-1-97

DATE	REVISIONS
1-1-11	Clarified ref. to pipe dia. on Section A-A. Changed 'inner' to 'outer' cage ref.
1-1-09	Switched units to English (metric).

PRECAST REINFORCED CONCRETE FLARED END SECTION

STANDARD 542301-03

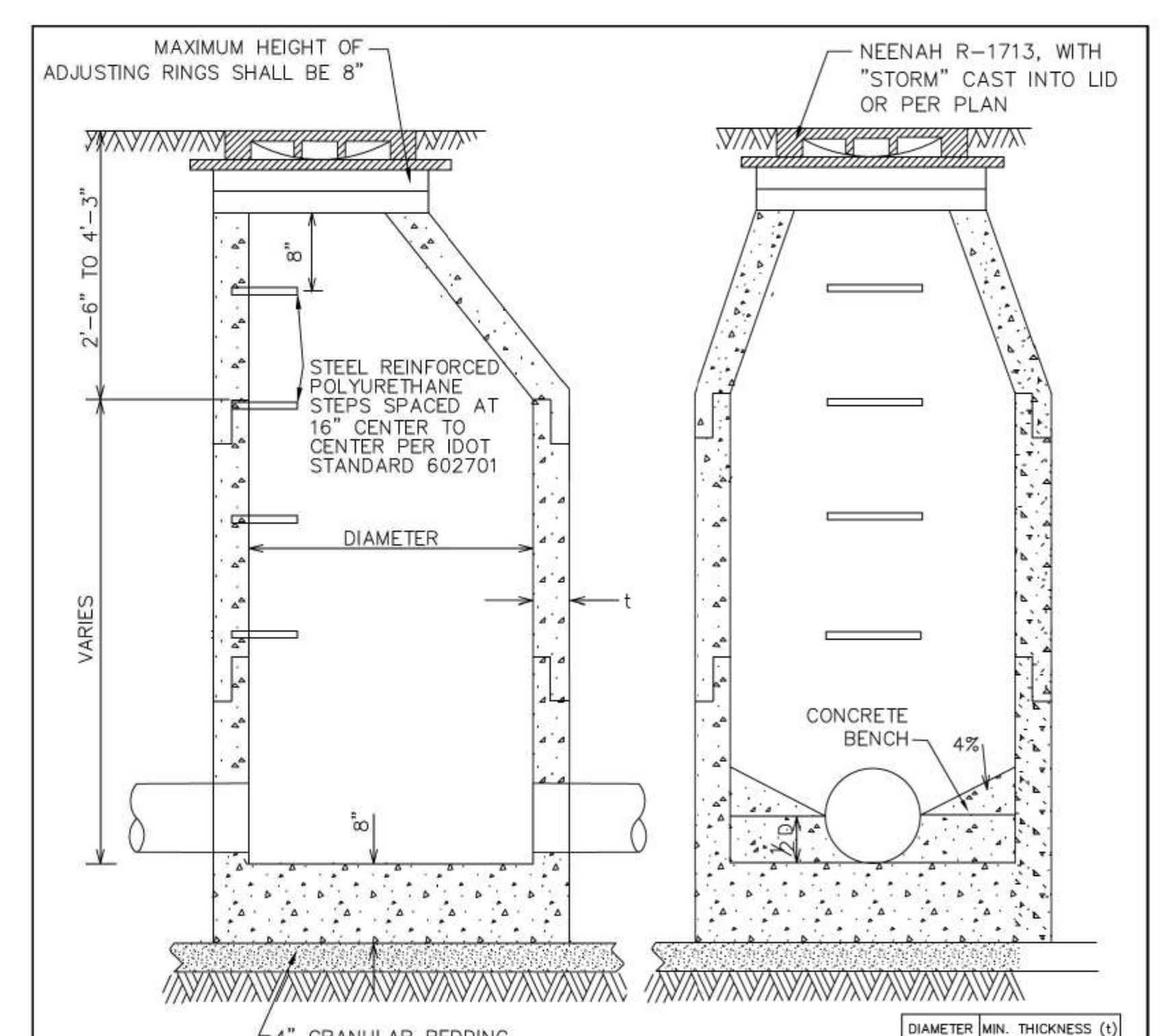

DIAMETER	MIN. THICKNESS (t)
48"	5"
60"	6"

NOTES:

1. PRECAST REINFORCED CONCRETE SECTIONAL PER ASTM C–478 AND PREFORMED BITUMINOUS JOINTS WITH INTEGRAL PRECAST BOTTOM.
2. PIPE OPENINGS SHALL BE PRECAST INTO WALLS.
3. ALL PIPE PENETRATIONS SHALL BE BRICK AND MORTARED, INSIDE AND OUT.
4. HIGH DENSITY POLYETHYLENE (HDPE) PLASTIC ADJUSTING RINGS AND STEEL RING WEDGES OR SHIMS SHALL BE USED FOR FINAL FRAME ADJUSTMENTS.
5. FLAT TOPS SHALL BE ACCORDING TO IDOT STANDARD 602601.

REVISED FEBRUARY 2022

VILLAGE OF DEERFIELD

PRECAST MANHOLE TYPE A DETAIL

NOT TO SCALE

NO.	DATE	REMARKS

NO.	DATE	REMARKS

DETAILS - 1

BRIDGE POINT O'HARE NORTH
DEERFIELD, IL

CONSULTING ENGINEERS
SITE DEVELOPMENT ENGINEERS
LAND SURVEYORS
9575 W. Higgins Road, Suite 700, Rosemont, Illinois 60018
Phone: (847) 696-4060 Fax: (847) 696-4065
SPACECO INC.

FILENAME: 12271DET1

DATE: 03/24/23

JOB NO. 12271

SHEET **C12.1**

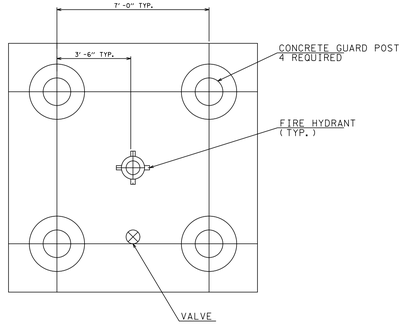

FIRE HYDRANT LAYOUT IN PAVEMENT WITH GUARD POST

N.T.S.

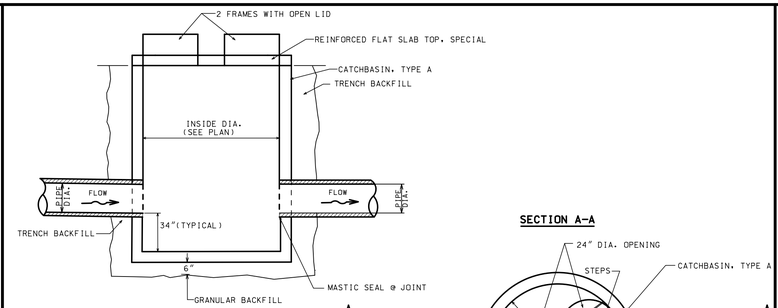

NOTE:

1. CATCHBASIN SHALL STRUCTURALLY CONFORM TO IDOT STANDARDS 602001-02 & 602701-02.
2. REINFORCED FLAT SLAB TOP SHALL CONFORM TO IDOT STANDARD 602601-04.
3. LOCATIONS OF GRATE/FRAME AND PIPE PENETRATIONS VARY WITH EACH CATCHBASIN, SPECIAL. EXACT LOCATIONS SHALL BE COORDINATED WITH PROPOSED UTILITY PLAN.

CATCHBASIN-SPECIAL

NOT TO SCALE

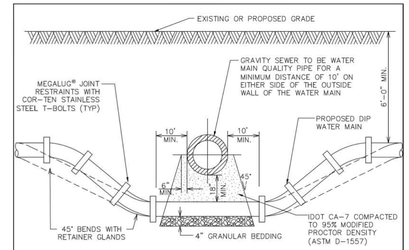

NOTES:

1. HORIZONTAL AND VERTICAL SEPARATION BETWEEN WATER MAINS AND SEWERS SHALL COMPLY WITH APPLICABLE SECTIONS OF THE VILLAGE OF DEERFIELD ENGINEERING GUIDE OR IEPA SEPARATION REQUIREMENTS, WHICHEVER IS MORE STRINGENT.
2. CONTRACTOR MAY BEND WATER MAIN PIPE UNIFORMLY UNDER SEWERS WITHOUT USING FITTINGS, PROVIDED THAT JOINT DEFLECTION DOES NOT EXCEED 5 DEGREES PER JOINT FOR PIPE UNDER 14" IN DIAMETER AND 3 DEGREES PER JOINT FOR PIPE 14" AND OVER IN DIAMETER. IF FITTINGS ARE USED, CONTINUOUS STRAPPING WITH RODS, STRAPS, NUTS AND BOLTS BELOW NORMAL WATERMAIN DEPTH ARE REQUIRED, OR RETAINER GLANDS MAY BE USED IN LIEU OF STRAPPING. RETAINER GLANDS TO BE CLOW No. F-1058 OR APPROVED EQUAL.
3. ALL SANITARY AND STORM SEWER (INCLUDING SERVICE) CROSSINGS WHERE THE WATER MAINS OR WATER SERVICES ARE LESS THAN 18" VERTICALLY ABOVE THE SEWER SHALL BE PVC SDR 26 CONFORMING TO ASTM D-2241. JOINTS SHALL CONFORM TO ASTM D-3139 AND GASKETS TO ASTM F-477. THE SAME PIPE AND JOINT MATERIALS SHALL BE USED WHENEVER WATER MAIN CROSSES BELOW THE SEWER.
4. FOR NEW SEWER INSTALLATIONS CROSSING OVER WATER MAINS, THE ENTIRE RUN OF NEW SEWER SHALL BE WATER MAIN QUALITY PIPE, EXTENDING FROM STRUCTURE TO STRUCTURE ON EACH SIDE OF THE CROSSING.

REVISED FEBRUARY 2022

VILLAGE OF DEERFIELD

WATER MAIN CROSSING DETAIL

NOT TO SCALE

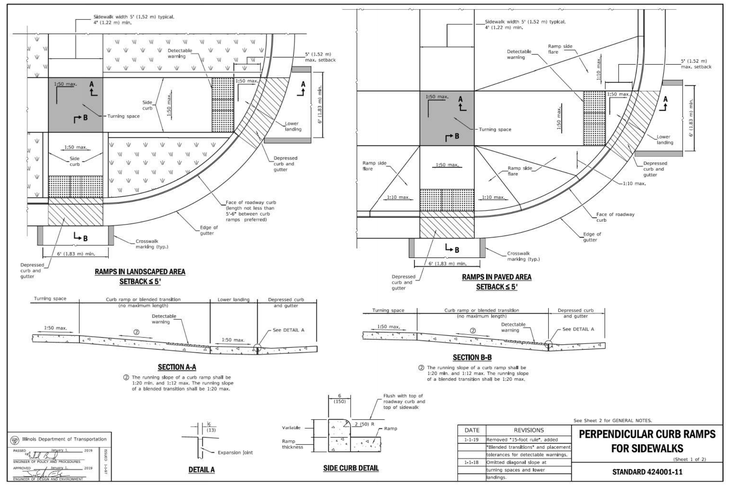

DATE	REVISIONS
1-1-18	Removed "13-foot rule", added "Blended transition" and placement tolerances for detectable warnings.
1-1-18	Omitted diagonal slope at turning spaces and lower landings.

PERPENDICULAR CURB RAMPS FOR SIDEWALKS

(Sheet 1 of 2)

STANDARD 424001-11

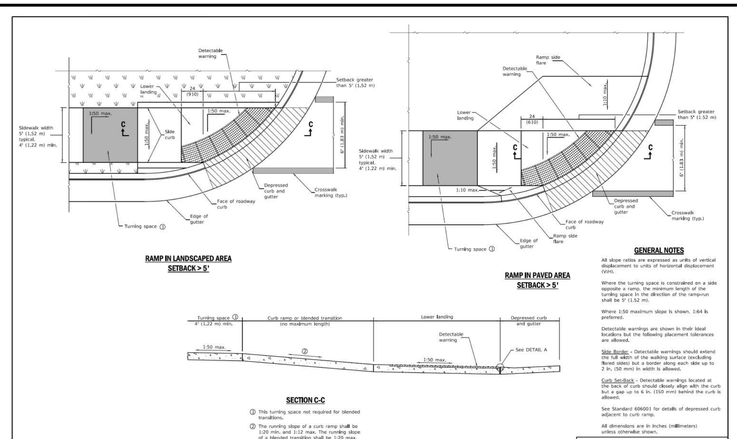

GENERAL NOTES

All slope ratios are expressed as units of vertical displacement to units of horizontal displacement (V:H).

Where the turning space is constrained on a side opposite a ramp, the minimum length of the turning space in the direction of the ramp run shall be 5' (1.52 m).

Where 1:50 maximum slope is shown, 1:64 is preferred.

Detectable warnings are shown in their ideal locations but the following placement tolerances are allowed.

Side Border - Detectable warnings should extend the full width of the walking surface (excluding flared sides) but a border along each side up to 2 in. (50 mm) in width is allowed.

Curb Setback - Detectable warnings located at the back of curb should closely align with the curb but a gap up to 6 in. (150 mm) behind the curb is allowed.

See Standard 606001 for details of depressed curb adjacent to curb ramp.

All dimensions are in inches (millimeters) unless otherwise shown.

DATE	REVISIONS
	Removed "13-foot rule", added "Blended transition" and placement tolerances for detectable warnings.
	Omitted diagonal slope at turning spaces and lower landings.

PERPENDICULAR CURB RAMPS FOR SIDEWALKS

(Sheet 2 of 2)

STANDARD 424001-11

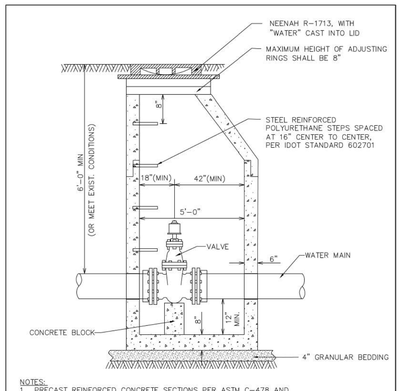

NOTES:

1. PRECAST REINFORCED CONCRETE SECTIONS PER ASTM C-478 AND PREFORMED BITUMINOUS JOINTS WITH INTEGRAL PRECAST BOTTOM.
2. PIPE OPENINGS SHALL BE PRECAST INTO WALLS, CAST IN RESILIENT WATERTIGHT SLEEVE WITH STAINLESS STEEL TRIM PER ASTM C-923.
3. USE ECCENTRIC CONE ONLY.
4. HIGH DENSITY POLYETHYLENE (HDPE) PLASTIC ADJUSTING RINGS AND STEEL RING WEDGES OR SHIMS SHALL BE USED FOR FINAL FRAME ADJUSTMENT.

REVISED FEBRUARY 2022

VILLAGE OF DEERFIELD

PRECAST VALVE VAULT DETAIL

NOT TO SCALE

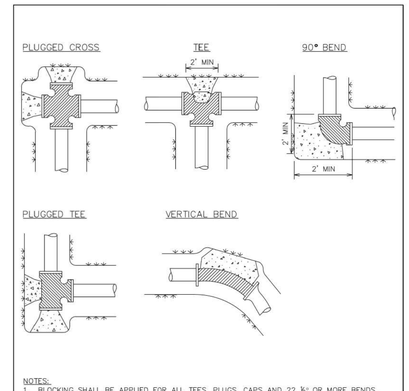

NOTES:

1. BLOCKING SHALL BE APPLIED FOR ALL TEES, PLUGS, CAPS AND 22 ½° OR MORE BENDS.
2. ALL BLOCKING SHALL BEAR AGAINST UNDISTURBED EARTH.
3. ALL CONCRETE TO BE MIN. 3,000 PSI.
4. IN ADDITION TO THE ABOVE THRUST BLOCKING; ALL MECHANICAL JOINTS, BENDS OVER 10° AND FIRE HYDRANTS SHALL HAVE A MEGALUG® JOINT RESTRAINT WITH COR-TEN T-BOLTS.

REVISED FEBRUARY 2022

VILLAGE OF DEERFIELD

THRUST BLOCK INSTALLATION DETAILS

NOT TO SCALE

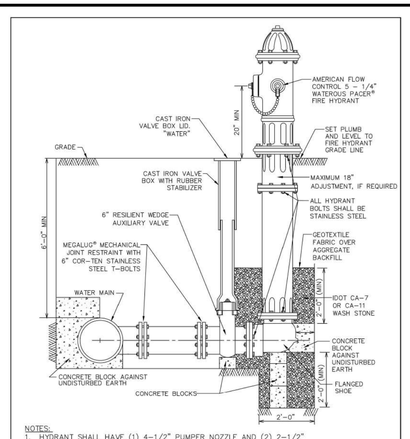

NOTES:

1. HYDRANT SHALL HAVE (1) 4-1/2" PUMPER NOZZLE AND (2) 2-1/2" HOSE NOZZLES, PAINTED RED WITH 100% ACRYLIC ENAMEL PAINT.
2. IF REQUIRED, AUXILIARY BOX ADAPTERS OR RISERS ARE NOT PERMITTED, ONLY AUXILIARY BOX EXTENSIONS.

REVISED FEBRUARY 2022

VILLAGE OF DEERFIELD

FIRE HYDRANT ASSEMBLY

NOT TO SCALE

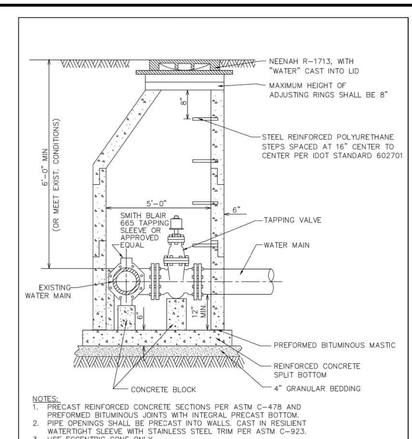

NOTES:

1. PRECAST REINFORCED CONCRETE SECTIONS PER ASTM C-478 AND PREFORMED BITUMINOUS JOINTS WITH INTEGRAL PRECAST BOTTOM.
2. PIPE OPENINGS SHALL BE PRECAST INTO WALLS, CAST IN RESILIENT WATERTIGHT SLEEVE WITH STAINLESS STEEL TRIM PER ASTM C-923.
3. USE ECCENTRIC CONE ONLY.
4. HIGH DENSITY POLYETHYLENE (HDPE) PLASTIC ADJUSTING RINGS AND STEEL RING WEDGES OR SHIMS SHALL BE USED FOR FINAL FRAME ADJUSTMENT.

REVISED FEBRUARY 2022

VILLAGE OF DEERFIELD

PRESSURE CONNECTION DETAIL

NOT TO SCALE

NO.	DATE	REMARKS

NO.	DATE	REMARKS

DETAILS - 2

BRIDGE POINT O'HARE NORTH
DEERFIELD, IL

CONSULTING ENGINEERS
SITE DEVELOPMENT ENGINEERS
LAND SURVEYORS

9575 W. Higgins Road, Suite 700,
Rosemont, Illinois 60018
Phone: (847) 696-4060 Fax: (847) 696-4065

SPACECO INC.

FILENAME:
12271DET2

DATE:
03/24/23

JOB NO.
12271

SHEET
C12.2
60 OF 63

N:\Projects 2022\12271\ENG\12271DET2.dgn Default User=shermanas

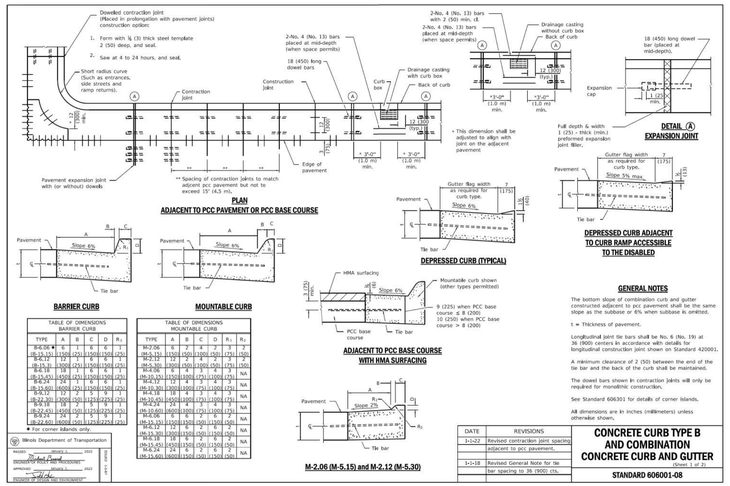

FOR SAUNDERS ROAD

OR APPROVED SIMILAR

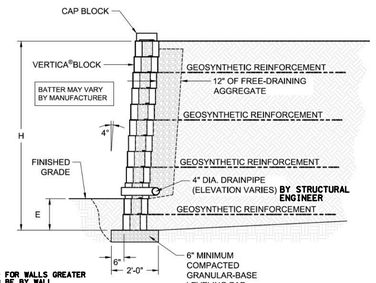

SPACECO NOTES:
1. **STRUCTURAL DESIGN IS REQUIRED FOR WALLS GREATER THAN 30" IN HEIGHT. DESIGN TO BE BY WALL MANUFACTURER AND/OR STRUCTURAL ENGINEER AND MUST BE SIGNED AND SEALED BY A LICENSED STRUCTURAL ENGINEER IN ORDER TO BE APPROVED BY THE MUNICIPALITY. CONTRACTOR TO COORDINATE STRUCTURAL DESIGN WITH WALL MANUFACTURER AND OBTAIN MUNICIPAL APPROVAL OF DESIGN PRIOR TO CONSTRUCTION. STRUCTURAL DESIGN SHALL INCLUDE DESIGN OF UNDERDRAIN SYSTEM.**
2. **COLOR SHALL BE "DESERT TAN".**
3. **TIE BACKS (WHERE APPLICABLE) FOR RETAINING WALLS SHALL NOT BE SEVERED BY UTILITY INSTALLATIONS.**

ANCHOR BUILD SOMETHING BEAUTIFUL
© 2015 Anchor Wall Engineering, LLC
® and ™ Anchor Wall Systems, Inc.
www.anchorwall.com

This drawing is for illustrative purposes only and should not be used for construction without the signature of a registered professional engineer.

Vertica® Straight Face Retaining Wall System
Typical Reinforced Cross Section

Date: 3/8" = 1'-0" | Drawn by: JB
Date: 1/19/2016 | Drawing number: VTST06

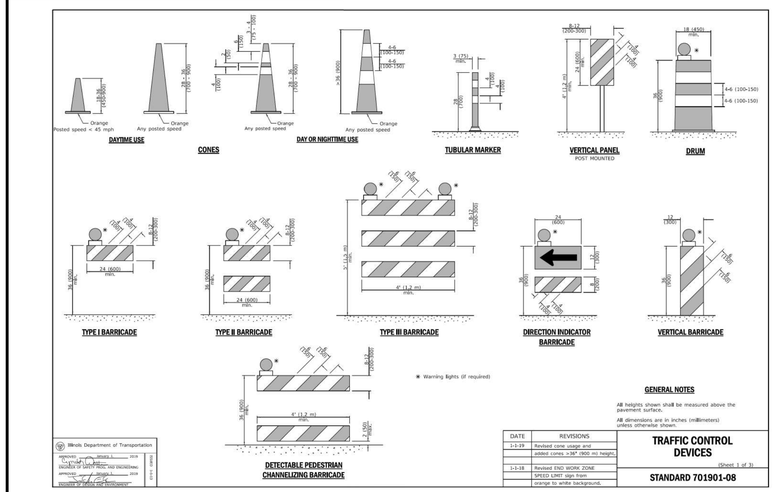

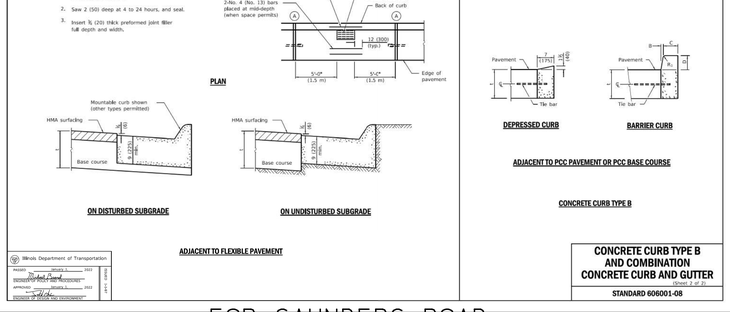

FOR SAUNDERS ROAD

OR APPROVED SIMILAR

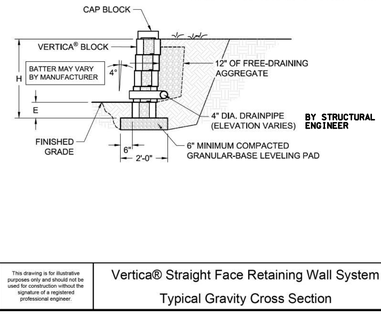

SPACECO NOTES:
1. **STRUCTURAL DESIGN IS REQUIRED FOR WALLS GREATER THAN 30" IN HEIGHT. DESIGN TO BE BY WALL MANUFACTURER AND/OR STRUCTURAL ENGINEER AND MUST BE SIGNED AND SEALED BY A LICENSED STRUCTURAL ENGINEER IN ORDER TO BE APPROVED BY THE MUNICIPALITY. CONTRACTOR TO COORDINATE STRUCTURAL DESIGN WITH WALL MANUFACTURER AND OBTAIN MUNICIPAL APPROVAL OF DESIGN PRIOR TO CONSTRUCTION. STRUCTURAL DESIGN SHALL INCLUDE DESIGN OF UNDERDRAIN SYSTEM.**
2. **COLOR SHALL BE "DESERT TAN".**
3. **TIE BACKS (WHERE APPLICABLE) FOR RETAINING WALLS SHALL NOT BE SEVERED BY UTILITY INSTALLATIONS.**

ANCHOR BUILD SOMETHING BEAUTIFUL
© 2015 Anchor Wall Engineering, LLC
® and ™ Anchor Wall Systems, Inc.
www.anchorwall.com

This drawing is for illustrative purposes only and should not be used for construction without the signature of a registered professional engineer.

Vertica® Straight Face Retaining Wall System
Typical Gravity Cross Section

Date: 3/8" = 1'-0" | Drawn by: JB
Date: 1/19/2016 | Drawing number: VTST07

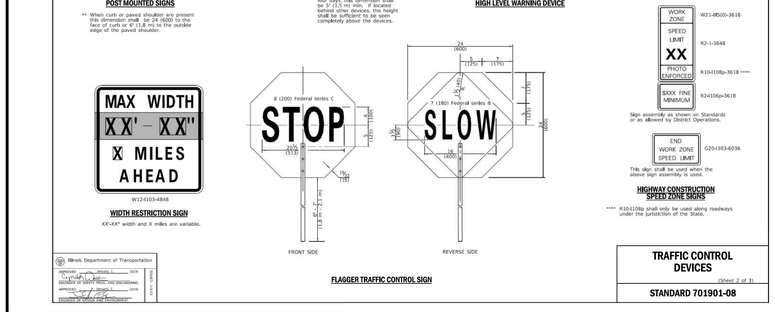

TRENCH BACKFILL LIMITS
NOT TO SCALE

DETAILS - 2

BRIDGE POINT O'HARE NORTH
DEERFIELD, IL

NO.	DATE	REMARKS

CONSULTING ENGINEERS
SITE DEVELOPMENT ENGINEERS
LAND SURVEYORS
9575 W. Higgins Road, Suite 700
Rosemont, Illinois 60018
Phone: (847) 696-4060 Fax: (847) 696-4065
SPACECO INC.

FILENAME: 12271DET3
DATE: 03/24/23
JOB NO. 12271
SHEET C12.3
61 OF 63

N:\Projects 2022\12271\ENG\12271DET3.dgn Default User=shermanas

TYPICAL PAVEMENT MARKINGS

TYPICAL MINI-SKIP PAVEMENT MARKINGS

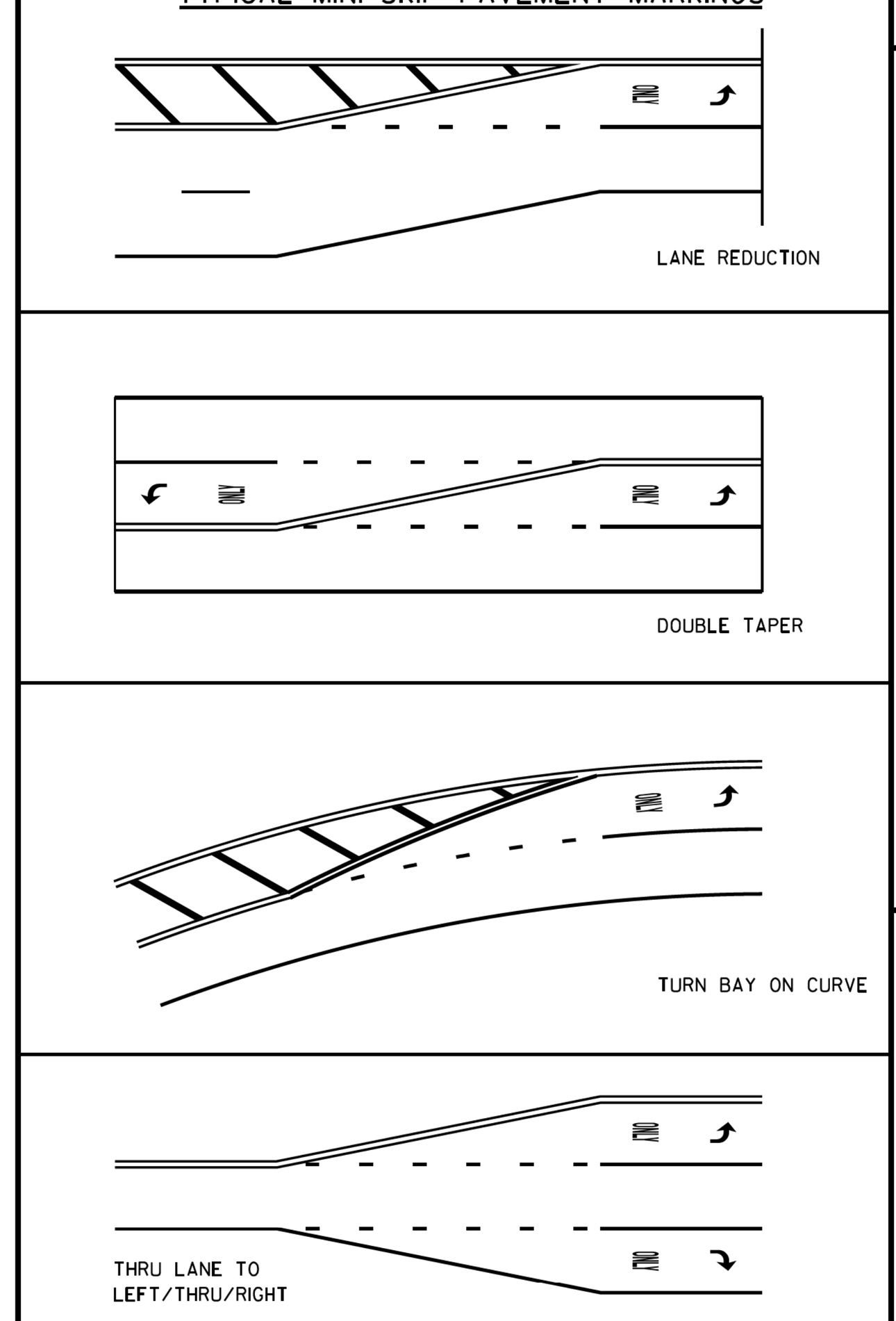

MINI-SKIPS ARE 2 FEET WHITE LINE WITH 6 FEET SPACING. THE MINI-SKIP IS THE SAME WIDTH AS THE PAVEMENT MARKING LINE, IT EXTENDS.

EDGE LINE RADII AT SIDE STREETS

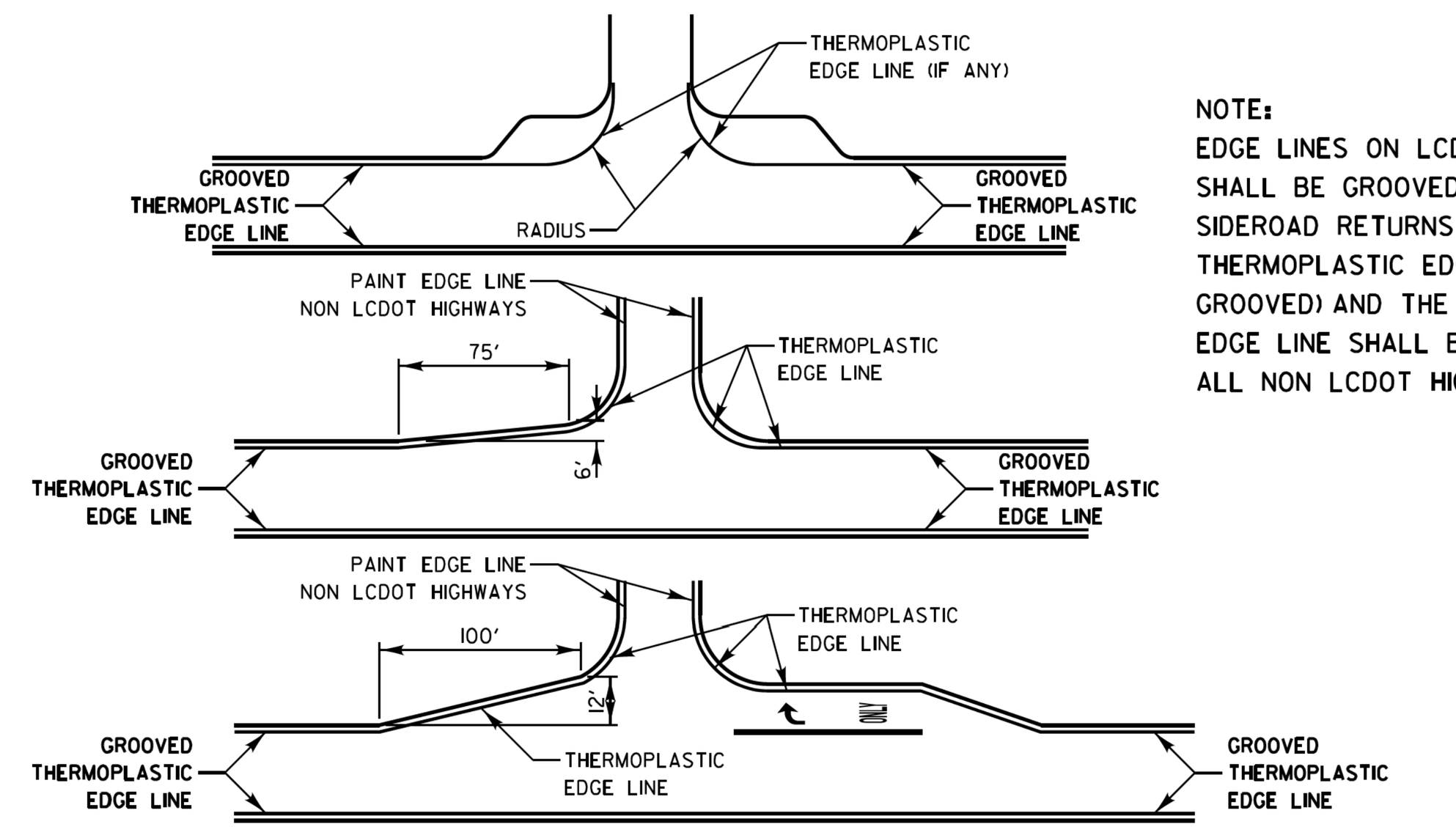

NOTE:
EDGE LINES ON LCDOT HIGHWAYS SHALL BE GROOVED THERMOPLASTIC. SIDEROAD RETURNS SHALL BE A THERMOPLASTIC EDGE LINE (NOT GROOVED) AND THE SIDEROAD EDGE LINE SHALL BE PAINT ON ALL NON LCDOT HIGHWAYS.

LANE REDUCTION ARROW PLACEMENT

REFERENCE:
1. MANUAL ON UNIFORM TRAFFIC CONTROL DEVICES, 2009 EDITION (USDOT-FHWA), TABLE 2C-4, CONDITION "A".

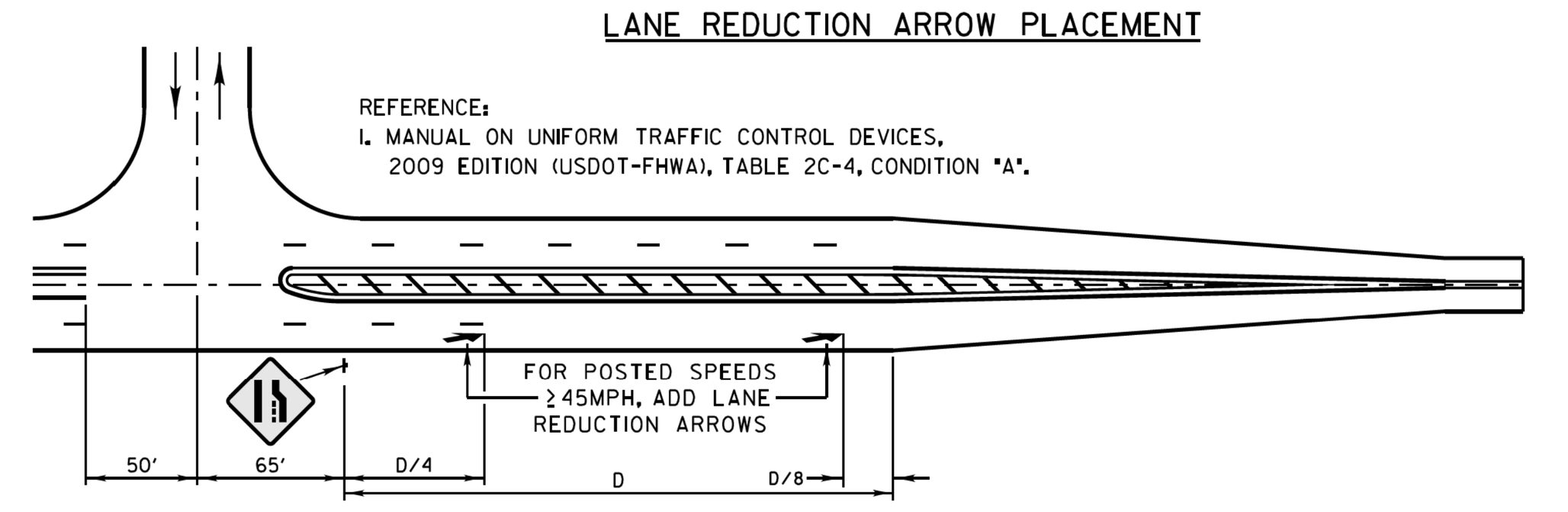

DESIGN SPEED MPH	D (FEET)
<45	VARIES
45	775' [1]
50	885' [1]
55	990' [1]

TYPCIAL TURN BAY PAVEMENT MARKINGS

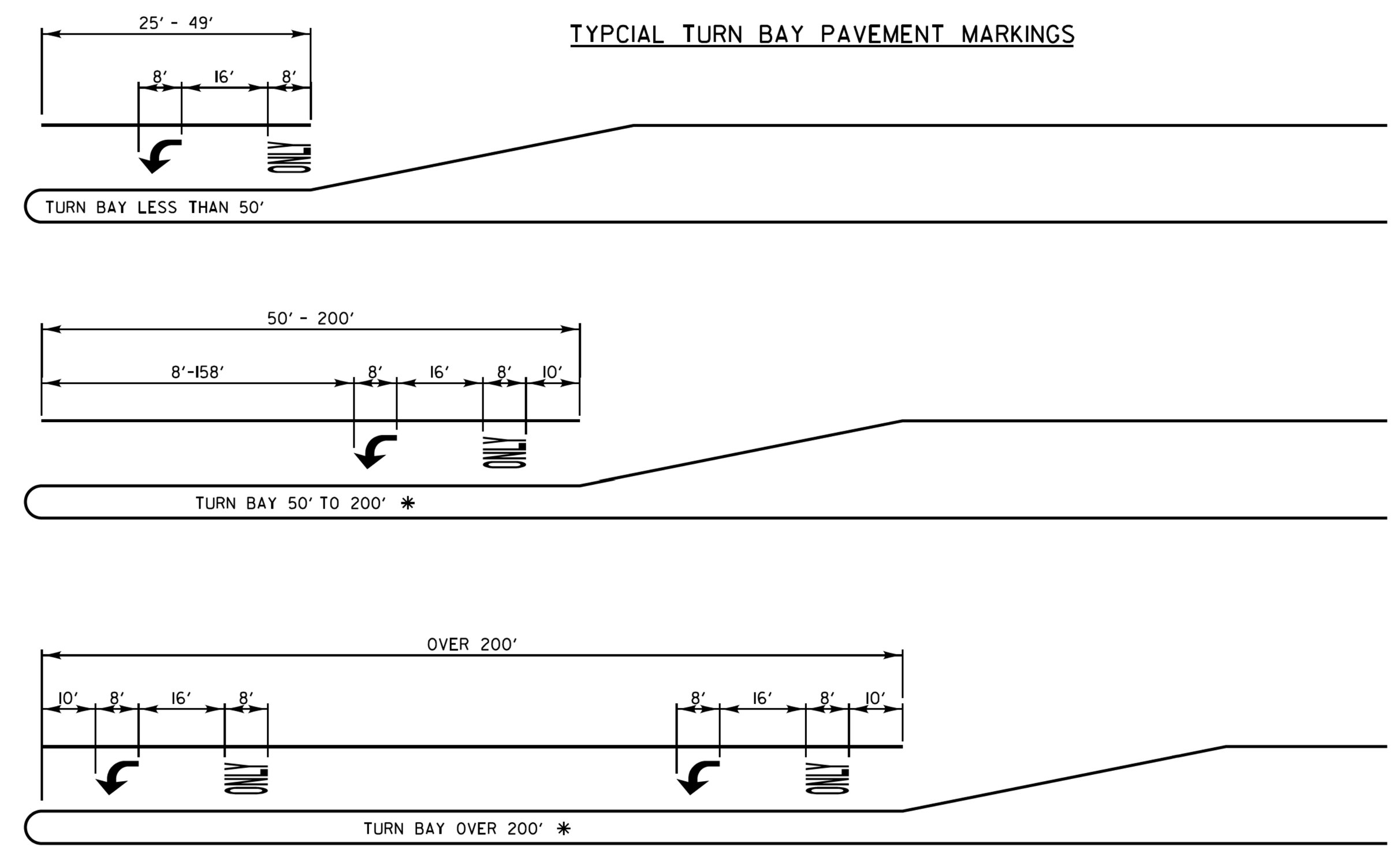

✱ AT INTERSECTIONS WITH VIDEO DETECTION, THE ARROW AND ONLY PAVEMENT MARKINGS SHALL BE A MINIMUM OF 30' BEHIND THE STOP BAR.

AREA = 15.6 SQ. FT.

ONLY AREA = 20.8 SQ FT.

FULL SIZE LETTERS (8') AND ARROWS SHALL BE USED. TURN LANES IN EXCESS OF 400' IN LENGTH MAY HAVE AN ADDITIONAL SET OF ARROW W/ "ONLY" INSTALLED MIDWAY BETWEEN THE OTHER TWO SETS OF ARROW W/ "ONLY".

TWO LANE ROAD

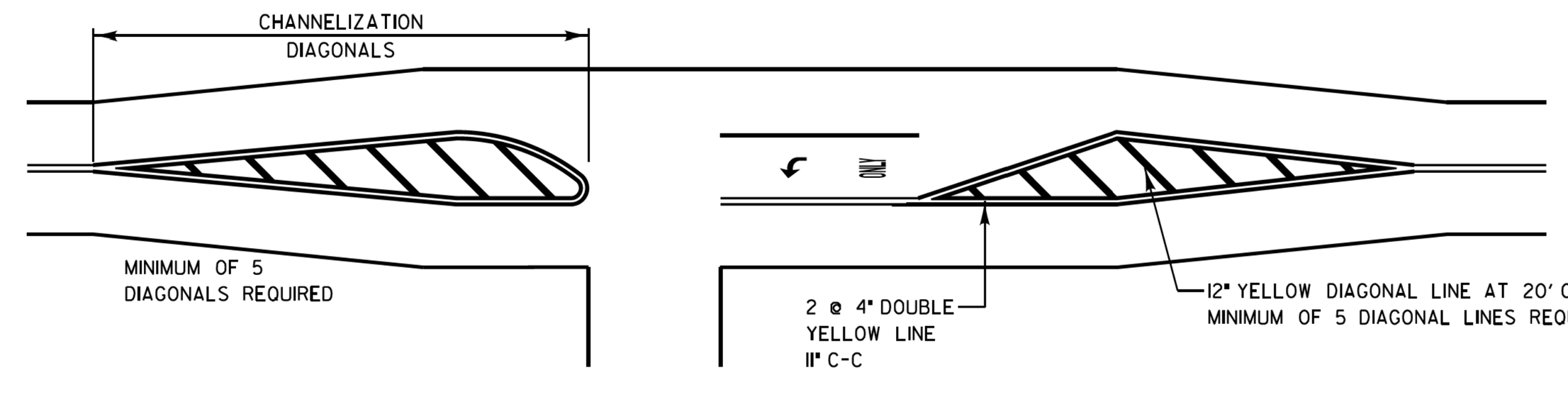

TYPICAL DIAGONAL SPACING

DIAGONAL SPACING

SPEED LIMIT RANGE	CONTINUOUS	INTERSECTION CHANNELIZATION
30-45 MPH	75 FT.	20 FT.
OVER 45 MPH	150 FT.	30 FT.

TWO-WAY LEFT TO LEFT TURN BAY

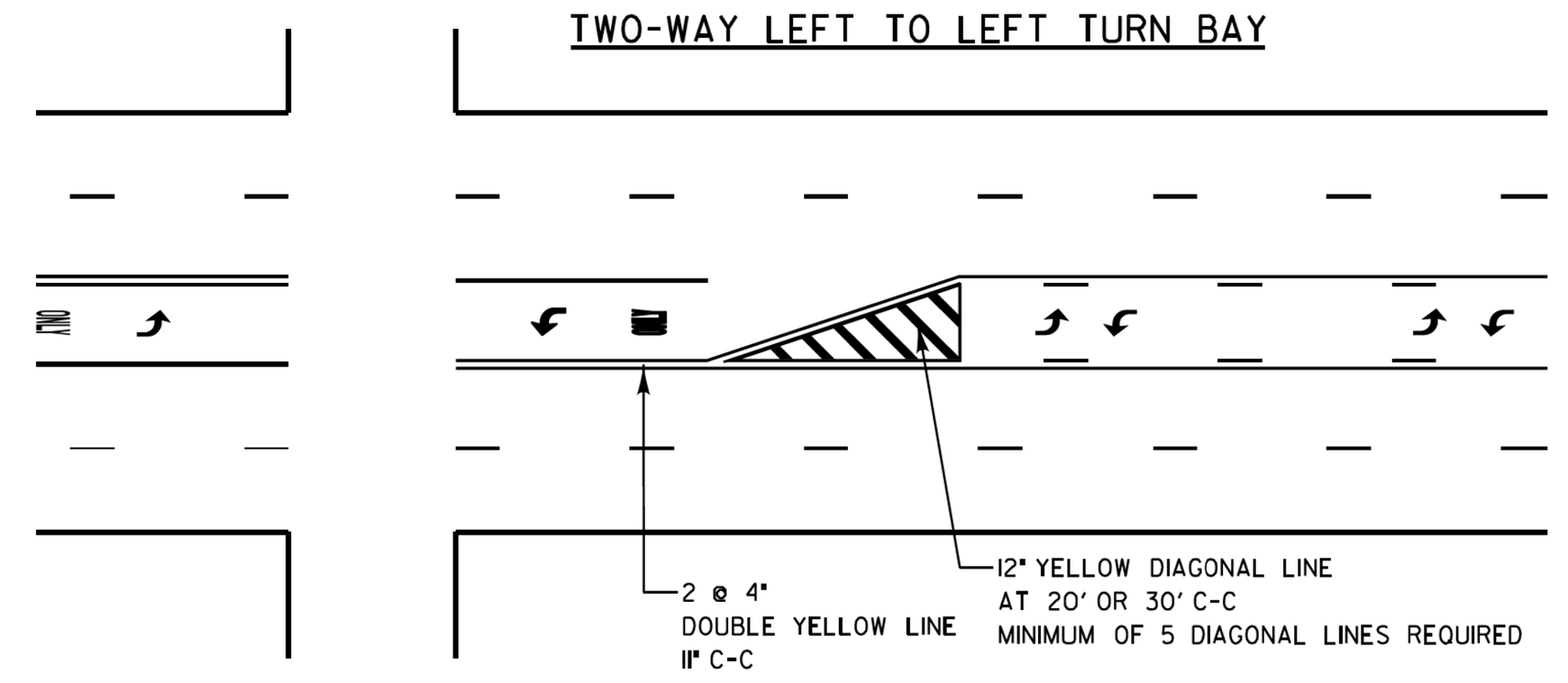

3 OR 5 LANE ROAD

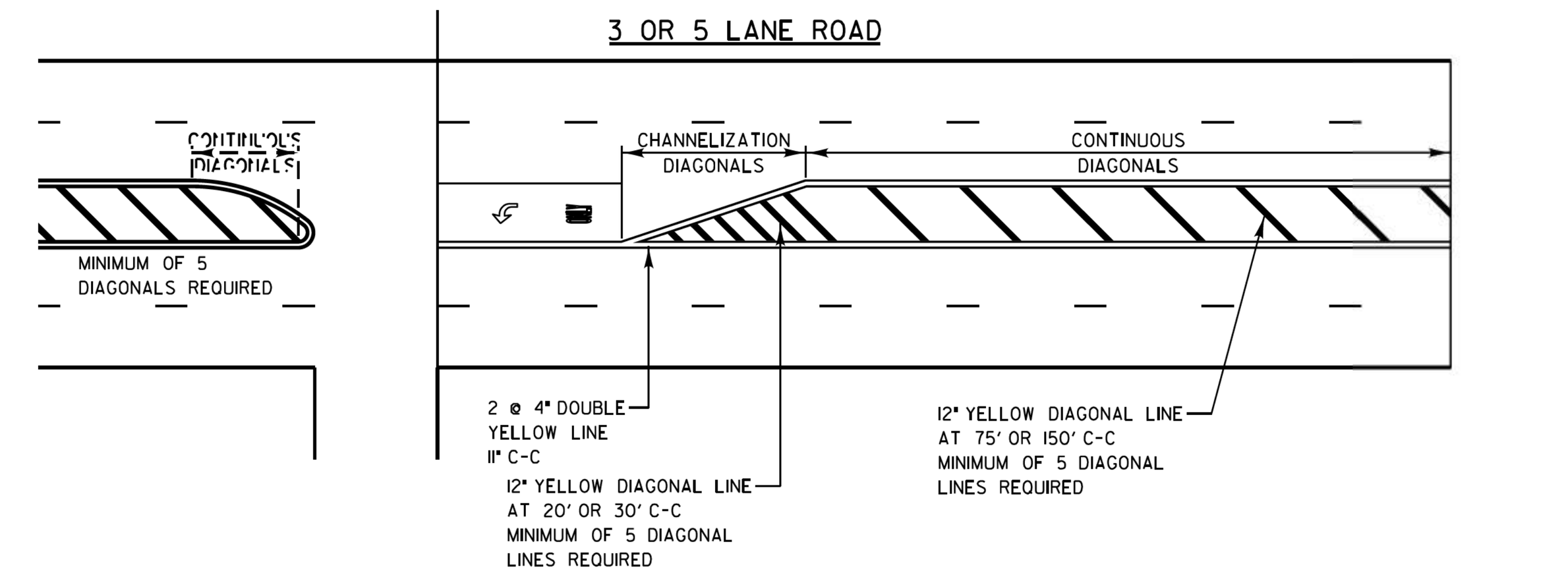

DUAL LEFT TURN ARROWS

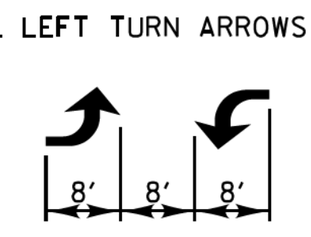

31.2 SQ. FT. MINIMUM OF 2 SETS REQUIRED

A MINIMUM OF TWO PAIRS OF DUAL LEFT TURN ARROWS SHALL BE USED. THE DUAL LEFT TURN ARROWS SHALL BE WHITE IN COLOR. THE INTERVAL BETWEEN SETS OF DUAL LEFT TURN ARROWS SHOULD BE 200' AND 300'.

REVISIONS	DATE
SEPARATED RAILROAD SHEET	06/02/08
ADDED LANE REDUCTION ARROWS	07/1/12
RAISED TO RECESSED MARKERS	12/2/13
REMOVE STATION NUMBERS	5/30/14
THERMO EDGELINES at RETURNS	11/18/16
ALL PM TO GROOVED THERMO	1/26/17
REVISED EDGELINES at RETURNS	4/10/17
REVISED STOB BAR/DBL YELLOW	8/31/17

LakeCounty Division of Transportation

APPROVED BY: A. KHAWAJA
DATE: APRIL 1, 2007

TYPICAL PAVEMENT MARKINGS FOR COUNTY HIGHWAYS
SHEET 1 OF 2

LC7800

REVISIONS / REMARKS					
NO.	DESCRIPTION	DATE	BY	SURVEYOR:	/
		/ /		DSGNR/LIAISON:	
		/ /		PLOTTED BY:	hdrmc 9/5/2017

LakeCounty Division of Transportation

PROJECT NAME
LAKE COUNTY STANDARDS & DETAILS

ROUTE	SECTION	SECTION NUMBER	SHEET	SHEETS
CHXX	XXX	XX-XXXXX-XX-XX	XXX	XXX

FILE NAME: C:\Users\hdrmc\Desktop\LC7800 TYPICAL PAVEMENT MARKINGS FOR COUNTY HIGHWAYS.dgn

DIRECTION INDICATOR BARRICADES

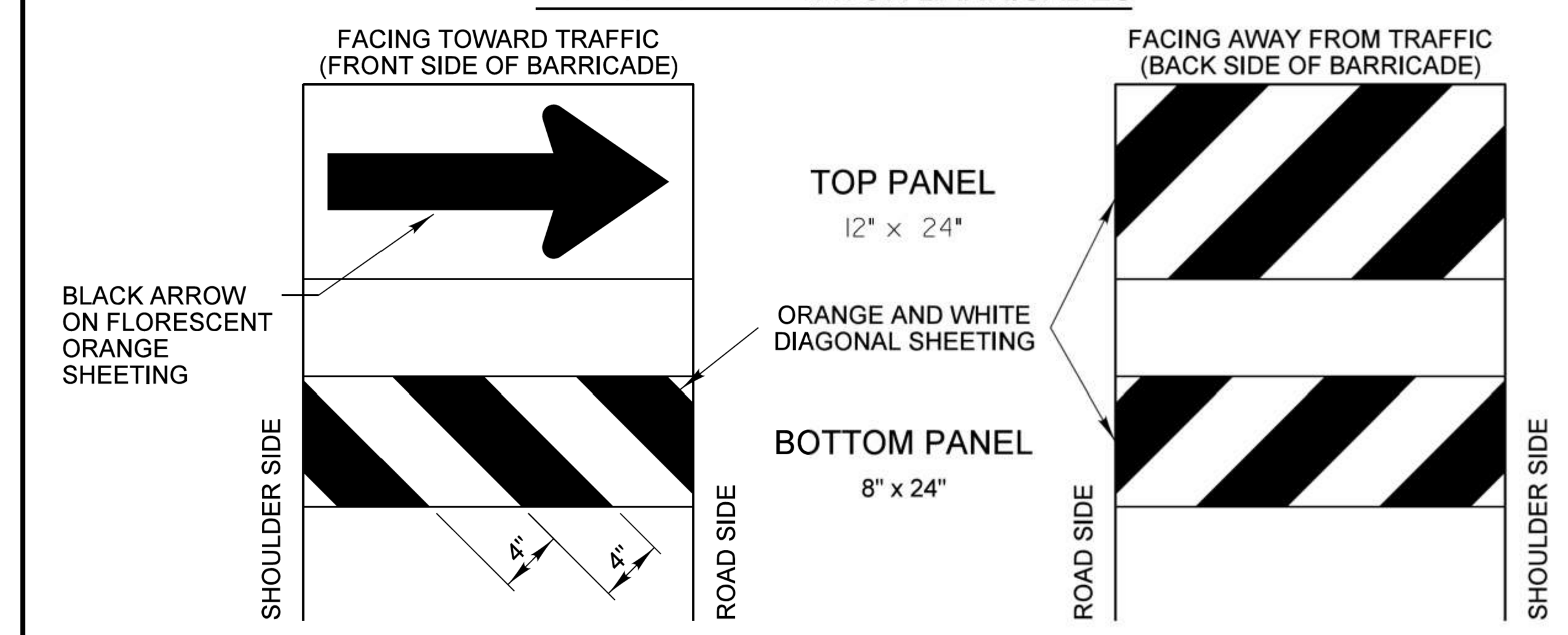

GENERAL NOTES

1) Direction Indicator Barricades shall be constructed from non-metallic Type II barricades meeting the requirements of Article 1106.02 of the Standard Specifications, except where modified by this detail.
2) The Direction Indicator Barricades shall be equipped with Type C steady burning lights if used to channelize traffic during the hours of darkness.
3) The reflective sheeting for the top panel shall be Type AZ fluorescent orange. The diagonal panels shall have orange and white Type A or better reflective sheeting.

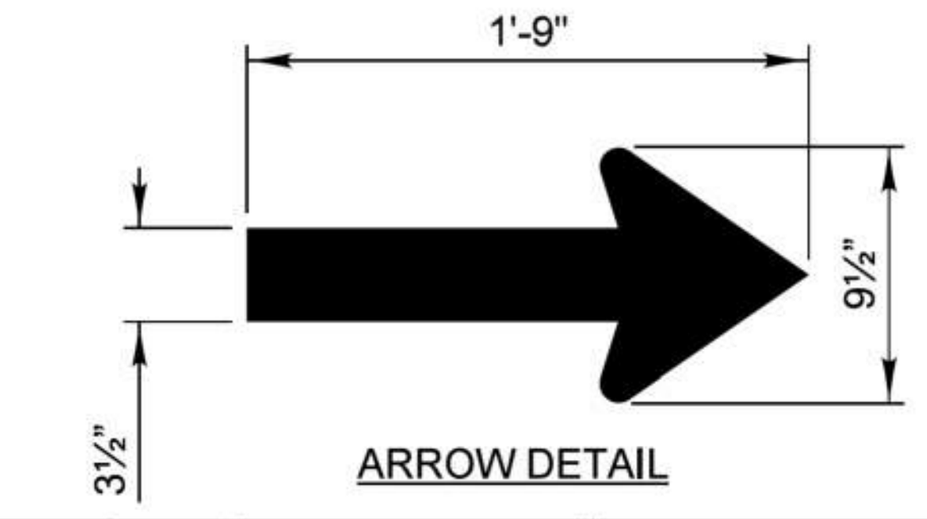

ARROW DETAIL

REVISIONS	DATE
Text Update	7/15/11

LakeCounty Division of Transportation

APPROVED BY: ANTHONY KHAWAJA
DATE: APRIL 1, 2007

TYPICAL APPLICATION OF TRAFFIC CONTROL DEVICES HIGHWAY CONSTRUCTION, CONTRACT MAINTENANCE

DIRECTION INDICATOR BARRICADES

LC7200

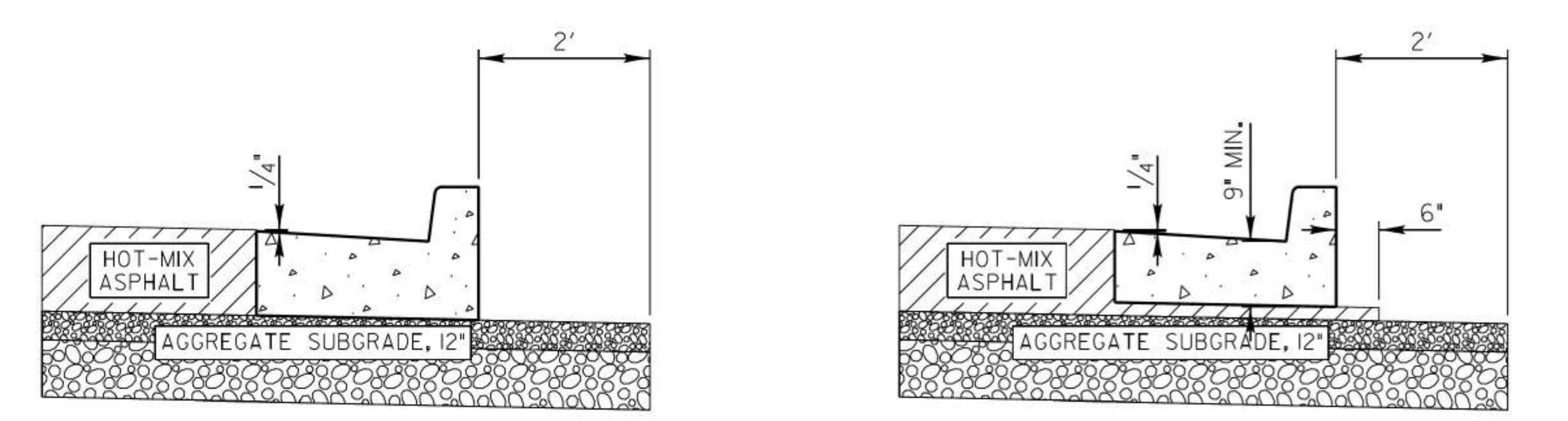

TYPICAL METHOD

NOTE:

MINIMUM FLAG THICKNESS 9"

OPTIONAL METHOD

NOTE:
COST OF HOT-MIX ASPHALT MATERIAL UNDER CURB AND 6" OUTSIDE OF CURB TO BE INCIDENTAL TO COST OF COMBINATION CONCRETE CURB AND GUTTER.

SCALE: 1" = 2'

LakeCounty Division of Transportation

APPROVED BY: M. G. ZEMAITIS
DATE: APRIL 1, 2007

CURB & GUTTER SUBGRADE OPTIONS

LC3000

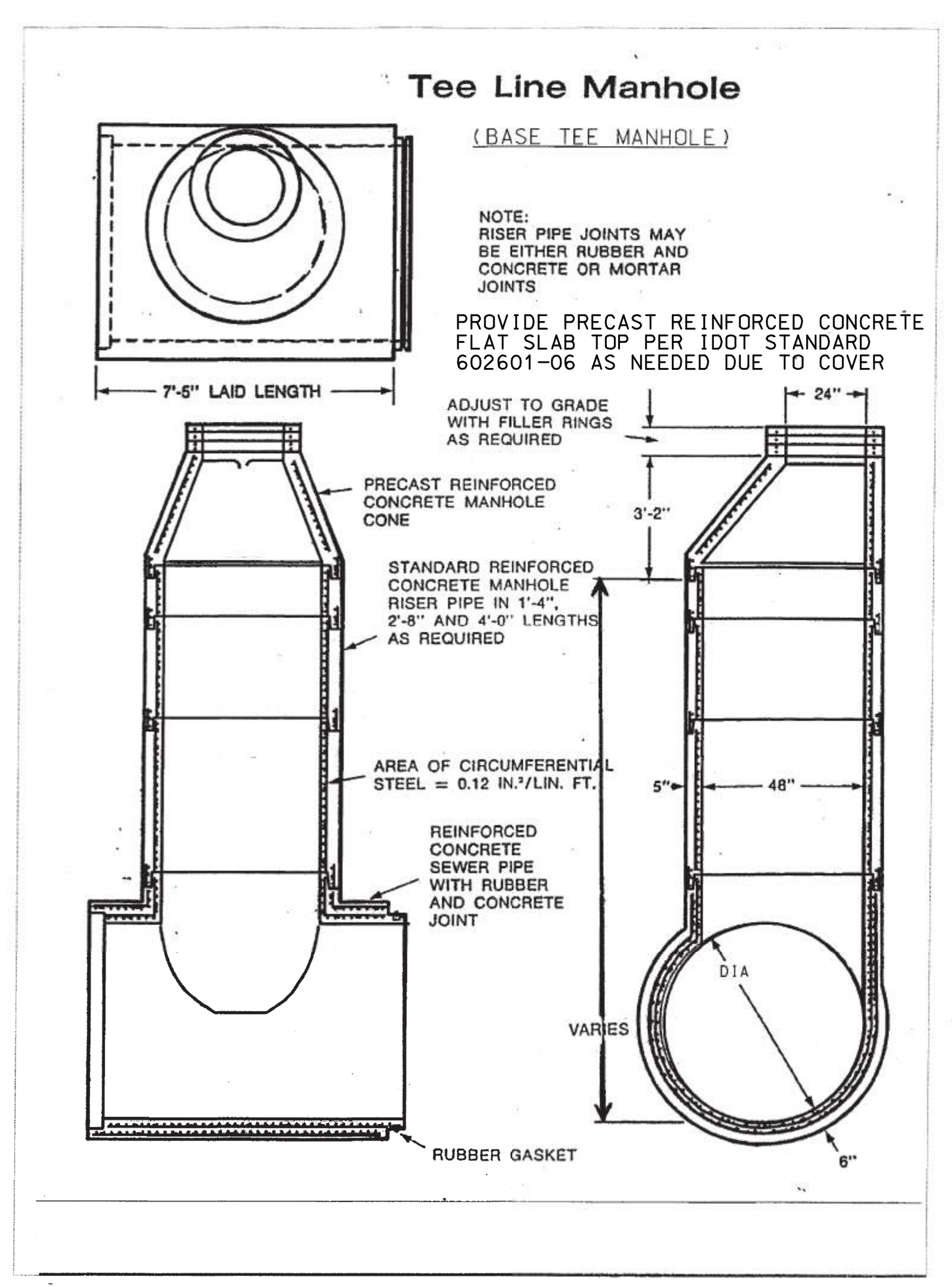

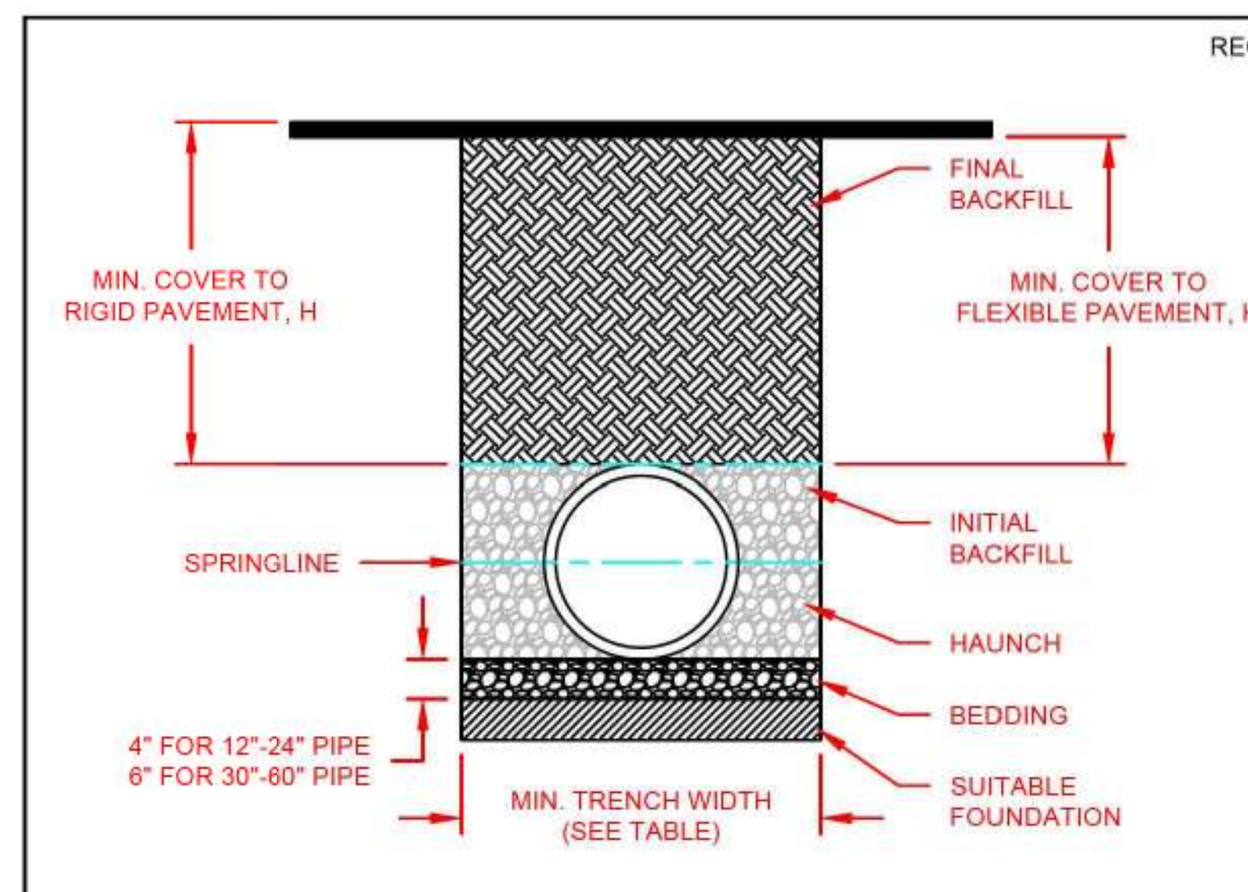

RECOMMENDED MINIMUM TRENCH WIDTHS

PIPE DIAM.	MIN. TRENCH WIDTH
4" (100mm)	21" (533mm)
6" (150mm)	23" (584mm)
8" (200mm)	26" (660mm)
10" (250mm)	28" (711mm)
12" (300mm)	30" (762mm)
15" (375mm)	34" (864mm)
18" (450mm)	39" (991mm)
24" (600mm)	48" (1219mm)
30" (750mm)	56" (1422mm)
36" (900mm)	64" (1626mm)
42" (1050mm)	72" (1829mm)
48" (1200mm)	80" (2032mm)
60" (1500mm)	96" (2438mm)

MINIMUM RECOMMENDED COVER BASED ON VEHICLE LOADING CONDITIONS**

PIPE DIAM.	SURFACE LIVE LOADING CONDITION	
	H-25	HEAVY CONSTRUCTION (75T AXLE LAOD) *
12" - 48" (300mm - 1200mm)	12" (305mm)	48" (1219mm)
60" (1500mm)	24" (610mm)	60" (1524mm)

* VEHICLES IN EXCESS OF 75T MAY REQUIRE ADDITIONAL COVER
**SEE BACKFILL REQUIREMENTS IN NOTE 6.

MAXIMUM RECOMMENDED COVER BASED ON VECHICLE LOADING CONDITIONS

PIPE DIAM.	CLASS I		CLASS II		CLASS III
	COMPACTED	DUMPED	95%	90%	95%
4" (100mm)	37 (11.3m)	18 (5.5m)	25 (7.6m)	18 (5.5m)	18 (5.5m)
6" (150mm)	44 (13.4m)	20 (6.1m)	29 (8.8m)	20 (6.1m)	21 (6.4m)
8" (200mm)	32 (9.8m)	15 (4.6m)	22 (6.7m)	15 (4.6m)	16 (4.9m)
10" (250mm)	38 (11.6m)	18 (5.5m)	26 (7.9m)	18 (5.5m)	18 (5.5m)
12" (300mm)	35 (10.7m)	17 (5.2m)	24 (7.3m)	17 (5.2m)	17 (5.2m)
15" (375mm)	38 (11.6m)	17 (5.2m)	25 (7.6m)	17 (5.2m)	18 (5.5m)
18" (450mm)	36 (11.0m)	17 (5.2m)	24 (7.3m)	17 (5.2m)	17 (5.2m)
24" (600mm)	28 (8.5m)	13 (4.0m)	20 (6.1m)	13 (4.0m)	14 (4.3m)
30" (750mm)	28 (8.5m)	13 (4.0m)	20 (6.1m)	13 (4.0m)	14 (4.3m)
36" (900mm)	26 (7.9m)	12 (3.7m)	18 (5.5m)	13 (4.0m)	13 (4.0m)
42" (1050mm)	23 (7.0m)	11 (3.4m)	16 (4.9m)	11 (3.4m)	11 (3.4m)
48" (1200mm)	25 (7.6m)	11 (3.4m)	17 (5.2m)	11 (3.4m)	12 (3.7m)
60" (1500mm)	25 (7.6m)	11 (3.4m)	17 (5.2m)	11 (3.4m)	12 (3.7m)

FILL HEIGHT TABLE GENERATED USING AASHTO SECTION 12, LOAD RESISTANCE FACTOR DESIGN (LRFD) PROCEDURE WITH THE FOLLOWING ASSUMPTIONS:
NO HYDROSTATIC PRESSURE,
UNIT WEIGHT OF SOIL (Ys) = 120 PCF

NOTES:

1. ALL PIPE SYSTEMS SHALL BE INSTALLED IN ACCORDANCE WITH ASTM D2321, "STANDARD PRACTICE FOR UNDERGROUND INSTALLATION OF THERMOPLASTIC PIPE FOR SEWERS AND OTHER GRAVITY FLOW APPLICATIONS", LATEST ADDITION

2. MEASURES SHOULD BE TAKEN TO PREVENT MIGRATION OF NATIVE FINES INTO BACKFILL MATERIAL, WHEN REQUIRED.

3. FOUNDATION: WHERE THE TRENCH BOTTOM IS UNSTABLE, THE CONTRACTOR SHALL EXCAVATE TO A DEPTH REQUIRED BY THE ENGINEER AND REPLACE WITH SUITABLE MATERIAL AS SPECIFIED BY THE ENGINEER. AS AN ALTERNATIVE AND AT THE DISCRETION OF THE DESIGN ENGINEER, THE TRENCH BOTTOM MAY BE STABILIZED USING A GEOTEXTILE MATERIAL.

4. BEDDING: SUITABLE MATERIAL SHALL BE CLASS I, II OR III. THE CONTRACTOR SHALL PROVIDE DOCUMENTATION FOR MATERIAL SPECIFICATION TO ENGINEER. UNLESS OTHERWISE NOTED BY THE ENGINEER, MINIMUM BEDDING THICKNESS SHALL BE 4" (100mm) FOR 4"-24" (100mm-600mm); 6" (150mm) FOR 30"-60" (750mm-1500mm).

5. INITIAL BACKFILL: SUITABLE MATERIAL SHALL BE CLASS I, II OR III IN THE PIPE ZONE EXTENDING TO THE CROWN OF PIPE. THE CONTRACTOR SHALL PROVIDE DOCUMENTATION FOR MATERIAL SPECIFICATION TO ENGINEER. MATERIAL SHALL BE INSTALLED AS REQUIRED IN ASTM D2321, LATEST EDITION.

6. MINIMUM COVER: MINIMUM COVER, H, IN NON-TRAFFIC APPLICATIONS (GRASS OR LANDSCAPE AREAS) IS 12" FROM THE TOP OF PIPE TO GROUND SURFACE. ADDITIONAL COVER MAY BE REQUIRED TO PREVENT FLOTATION. FOR TRAFFIC APPLICATIONS, MINIMUM COVER, H, IS 12" UP TO 48" DIAMETER PIPE AND 24" OF COVER FOR 60" DIAMETER PIPE, MEASURED FROM TOP OF PIPE TO BOTTOM OF FLEXIBLE PAVEMENT OR TO TOP OF RIGID PAVEMENT. FOR TRAFFIC APPLICATIONS WITH LESS THAN FOUR FEET OF COVER, EMBEDMENT OF THE PIPE SHALL BE USING ONLY A CLASS I OR CLASS II BACKFILL.

6	INITIAL BACKFILL	JAB	04/02/20	
REV.	DESCRIPTION	BY	MM/DD/YY	CHK'D

© 2020 ADS, INC.
ADVANCED DRAINAGE SYSTEMS, INC. ("ADS") HAS PREPARED THIS DETAIL BASED ON INFORMATION PROVIDED TO ADS. THIS DRAWING IS INTENDED TO DEPICT THE COMPONENTS AS REQUESTED. ADS HAS NOT PERFORMED ANY ENGINEERING OR DESIGN SERVICES FOR THIS PROJECT, NOR HAS ADS INDEPENDENTLY VERIFIED THE INFORMATION SUPPLIED. THE INSTALLATION DETAILS PROVIDED HEREIN ARE GENERAL RECOMMENDATIONS AND ARE NOT SPECIFIC FOR THIS PROJECT. THE DESIGN ENGINEER SHALL REVIEW THESE DETAILS PRIOR TO CONSTRUCTION. IT IS THE DESIGN ENGINEERS RESPONSIBILITY TO ENSURE THE DETAILS PROVIDED HEREIN MEETS OR EXCEEDS THE APPLICABLE NATIONAL, STATE, OR LOCAL REQUIREMENTS AND TO ENSURE THAT THE DETAILS PROVIDED HEREIN ARE ACCEPTABLE FOR THIS PROJECT.

TRENCH INSTALLATION DETAIL (N-12 PER AASHTO)
DRAWING NUMBER: STD-101

ADS Advanced Drainage Systems, Inc.
4640 TRUEMAN BLVD HILLIARD, OHIO 43026

TJR
12/29/16
NTS
1 OF 1

TYPICAL APPLICATION OF TRAFFIC CONTROL DEVICES for HIGHWAY CONSTRUCTION, CONTRACT MAINTENANCE and UTILITY OPERATIONS

NOT TO SCALE

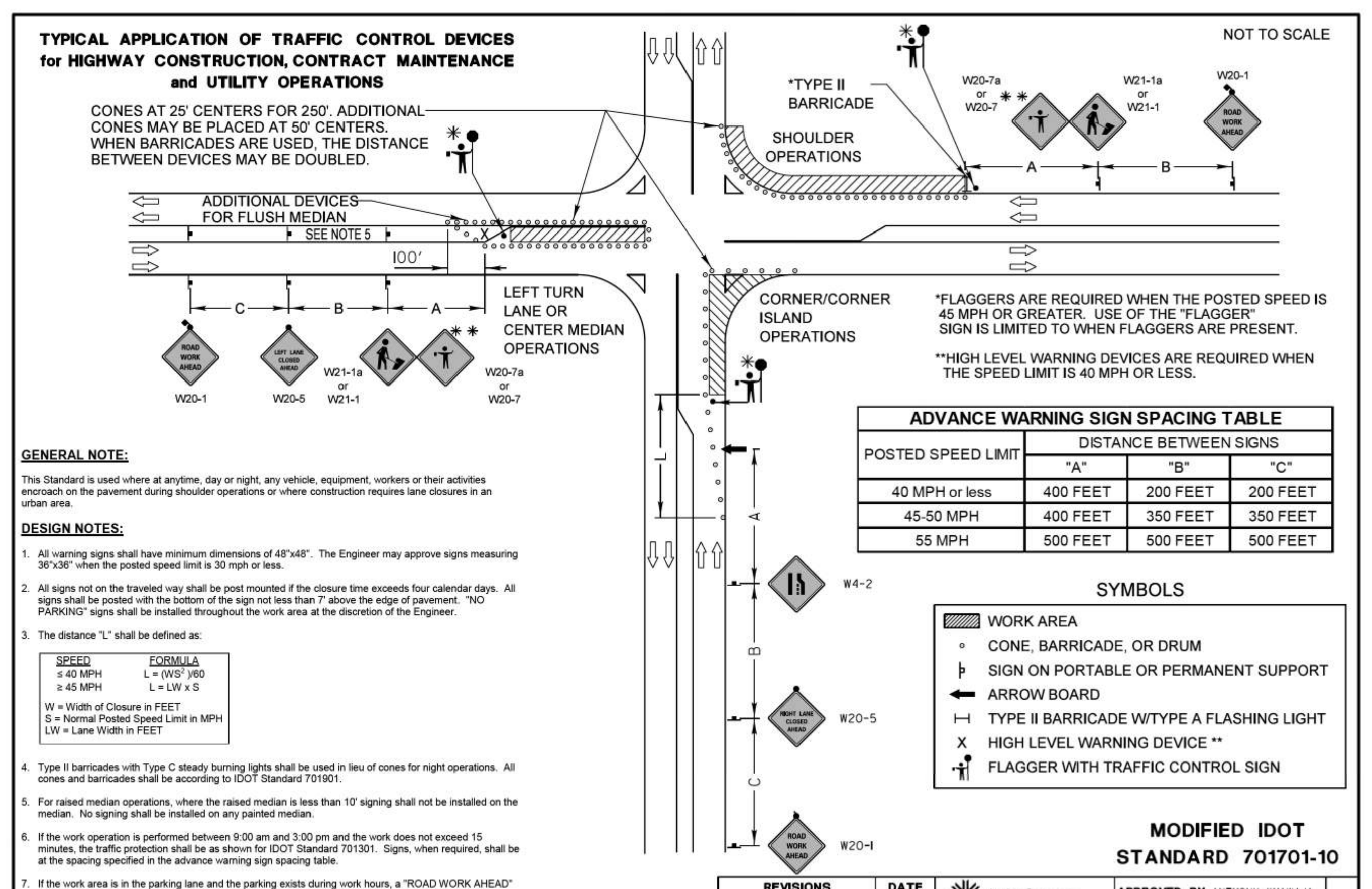

*FLAGGERS ARE REQUIRED WHEN THE POSTED SPEED IS 45 MPH OR GREATER. USE OF THE "FLAGGER" SIGN IS LIMITED TO WHEN FLAGGERS ARE PRESENT.

**HIGH LEVEL WARNING DEVICES ARE REQUIRED WHEN THE SPEED LIMIT IS 40 MPH OR LESS.

ADVANCE WARNING SIGN SPACING TABLE

POSTED SPEED LIMIT	DISTANCE BETWEEN SIGNS		
	"A"	"B"	"C"
40 MPH or less	400 FEET	200 FEET	200 FEET
45-50 MPH	400 FEET	350 FEET	350 FEET
55 MPH	500 FEET	500 FEET	500 FEET

SYMBOLS

- WORK AREA
- CONE, BARRICADE, OR DRUM
- SIGN ON PORTABLE OR PERMANENT SUPPORT
- ARROW BOARD
- TYPE II BARRICADE W/TYPE A FLASHING LIGHT
- X HIGH LEVEL WARNING DEVICE **
- FLAGGER WITH TRAFFIC CONTROL SIGN

GENERAL NOTE:

This Standard is used where at anytime, day or night, any vehicle, equipment, workers or their activities encroach on the pavement during shoulder operations or where construction requires lane closures in an urban area.

DESIGN NOTES:

1. All warning signs shall have minimum dimensions of 48"x48". The Engineer may approve signs measuring 36"x36" when the posted speed limit is 30 mph or less.
2. All signs not on the traveled way shall be post mounted if the closure time exceeds four calendar days. All signs shall be posted with the bottom of the sign not less than 7' above the edge of pavement. "NO PARKING" signs shall be installed throughout the work area at the discretion of the Engineer.
3. The distance "L" shall be defined as:

SPEED	FORMULA
≤ 40 MPH	$L = (WS^2)/60$
≥ 45 MPH	$L = LW \times S$

W = Width of Closure in FEET
S = Normal Posted Speed Limit in MPH
LW = Lane Width in FEET

4. Type II barricades with Type C steady burning lights shall be used in lieu of cones for night operations. All cones and barricades shall be according to IDOT Standard 701901.
5. For raised median operations, where the raised median is less than 10' signing shall not be installed on the median. No signing shall be installed on any painted median.
6. If the work operation is performed between 9:00 am and 3:00 pm and the work does not exceed 15 minutes, the traffic protection shall be as shown for IDOT Standard 701301. Signs, when required, shall be at the spacing specified in the advance warning sign spacing table.
7. If the work area is in the parking lane and the parking exists during work hours, a "ROAD WORK AHEAD" sign shall be installed in advance of work area at the spacing specified in the Advance Warning Sign Spacing Table and the area protected with cones or barricades.
8. Type A flashing lights shall be used on each approach in advance of the work area during hours of darkness and installed above the first two sign in each series and the high level warning devices.
9. Longitudinal dimensions may be adjusted to fit field conditions.
10. Form BT 725 is required.

MODIFIED IDOT STANDARD 701701-10

REVISIONS	DATE
Revised IDOT Reference	2/1/08
Title Block Revision	8/1/09
Reformat LCDOT Standard	7/15/10
Removed "Worker" & "Flagger" signs	6/26/12
Updated IDOT Standard Version #	3/29/16

LakeCounty Division of Transportation

APPROVED BY: ANTHONY KHAWAJA
DATE: APRIL 1, 2007

URBAN LANE CLOSURE MULTILANE INTERSECTION

LC7003

NO.	DATE	REMARKS

NO.	DATE	REMARKS

DETAILS - 4

BRIDGE POINT O'HARE NORTH
DEERFIELD, IL

CONSULTING ENGINEERS
SITE DEVELOPMENT ENGINEERS
LAND SURVEYORS
9575 W. Higgins Road, Suite 700, Rosemont, Illinois 60018
Phone: (847) 696-4060 Fax: (847) 696-4065
SPACECO INC.

FILENAME: 12271DET4

DATE: 03/24/23

JOB NO. 12271

SHEET C12.4

N:\Projects 2022\12271\ENG\12271DET4.dgn Default User=shermanas

RESTRICTOR CATCH BASIN (OCS-602B)

NOT TO SCALE

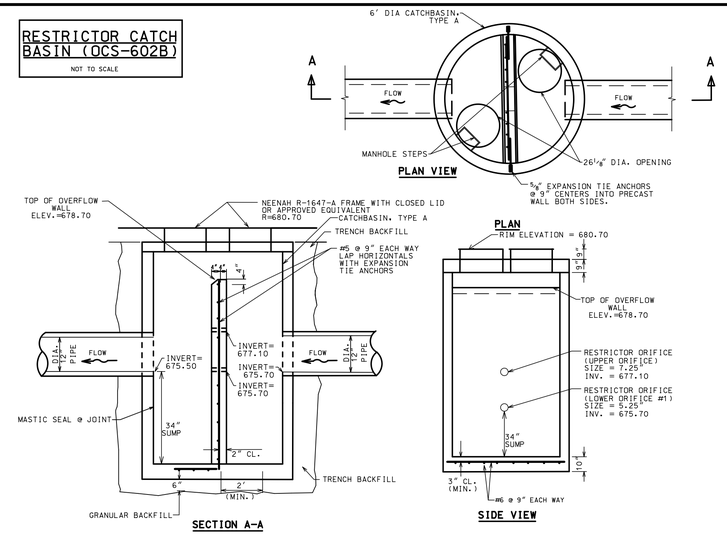

RESTRICTOR CATCH BASIN (OCS-302B)

NOT TO SCALE

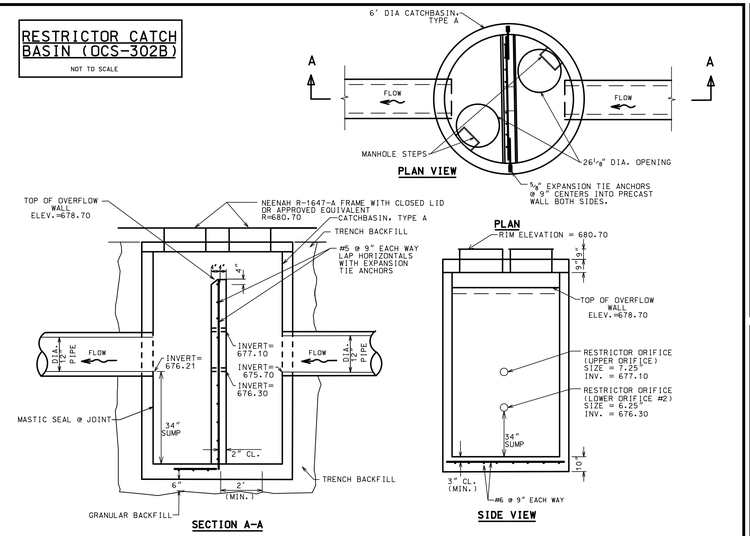

RESTRICTOR CATCH BASIN (OCS-802B)

NOT TO SCALE

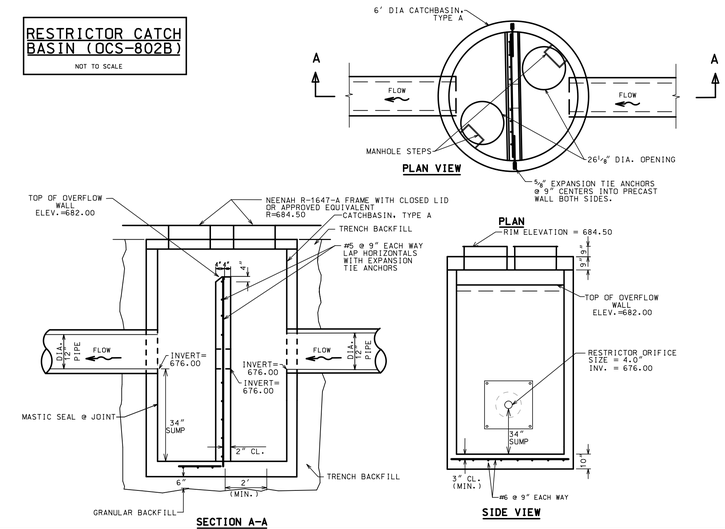

RESTRICTOR CATCH BASIN (OCS-402B)

NOT TO SCALE

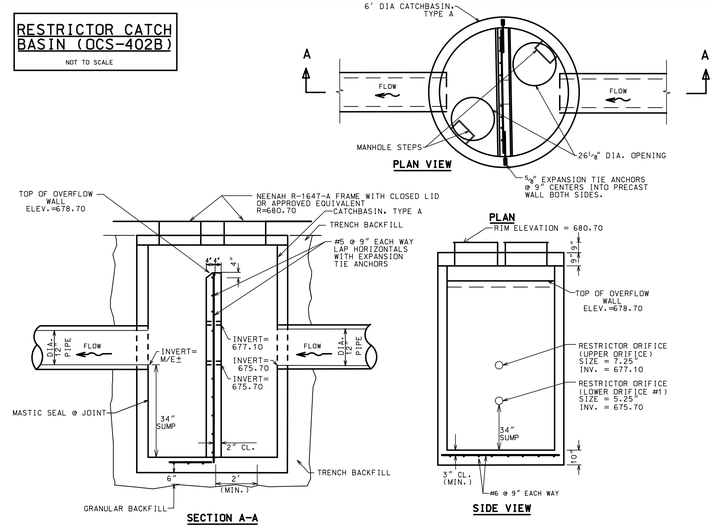

RESTRICTOR CATCH BASIN (OCS-502B)

NOT TO SCALE

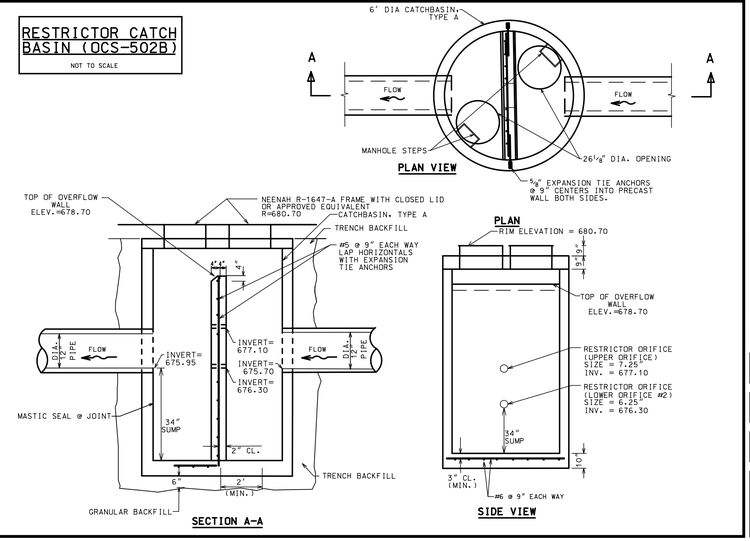

NO.	DATE	REMARKS

NO.	DATE	REMARKS

DETAILS - 5

BRIDGE POINT O'HARE NORTH
DEERFIELD, IL

CONSULTING ENGINEERS
SITE DEVELOPMENT ENGINEERS
LAND SURVEYORS
9575 W. Higgins Road, Suite 700
Rosemont, Illinois 60018
Phone: (847) 696-4060 Fax: (847) 696-4065
SPACECO INC.

FILENAME: 12271DET5

DATE: 03/24/23

JOB NO. 12271

SHEET C12.5

63 OF 63

N:\Projects 2022\12271\ENG\12271DET5.dgn Default User=shermanas